European Train the Trainer Programme for Responders

# Lecture 3

# Hydrogen storage

# LEVEL IV

# Specialist officer

The information contained in this lecture is targeted at the level of specialist officer and above.

This topic is also available at levels I-III

This lecture is part of a training material package with materials at levels I – IV : Firefighter, crew commander, incident commander and specialist officer. Please see the lecture introduction regarding competence and learning expectations

Note: these materials are the property of the HyResponder Consortium and should be acknowledged accordingly, the outputs of HyResponse have been used as a basis

Clean Hydrogen Partnership

Co-funded by the European Union

## Disclaimer

Despite the care that was taken while preparing this document the following disclaimer applies: the information in this document is provided as is and no guarantee or warranty is given that the information is fit for any particular purpose. The user thereof employs the information at his/her sole risk and liability.

The document reflects only the authors' views. The FCH JU and the European Union are not liable for any use that may be made of the information contained therein.

## Acknowledgments

This project has received funding from the Fuel Cells and Hydrogen 2 Joint Undertaking (now Clean Hydrogen Partnership) under Grant Agreement No 875089. This Joint Undertaking receives support from the European Union's Horizon 2020 Research and Innovation program, Hydrogen Europe and Hydrogen Europe Research..

## Summary

This lecture addressed different hydrogen storage options – compressed, liquefied and in solid materials, as well as hazards and safety issues associated with them. Close attention was paid to the most common method of storing hydrogen in high-pressure storage tanks. The different types of hydrogen storage vessels and their main components have been considered. The topics relevant to Responders such as consequences of a catastrophic rupture of the vessels and fire resistance rating of hydrogen storage tanks were discussed in detail. This lecture also covers the topic of the state-of-the-art 'leak no burst technology'.

The HyResponse project is acknowledged as the materials presented here are extended based on the original HyResponse lectures.

## Keywords

Hydrogen storage, compressed hydrogen, storage vessel, liquefied hydrogen, hydrogen storage materials, burst prevention, leak-no-burst

# Table of contents

Summary ..... 3
Keywords ..... 3
1. Target audience ..... 5
1.1 Roll description: Specialist ..... 5
1.2 Competence level: Specialist ..... 5
1.3 Prior learning: Specialist ..... 5
2. Introduction and objectives ..... 5
3. Hydrogen storage options ..... 6
4. Storage of gaseous hydrogen ..... 8
4.1 Types of $cGH_2$ storage vessels ..... 9
4.2 On-board hydrogen storage ..... 12
4.3 Pressure Relief Devices ..... 15
4.4 Testing of $cGH_2$ tanks ..... 18
5. Liquefied hydrogen storage ..... 23
6. Solid storage of hydrogen ..... 25
7. Consequences of catastrophic failure of high-pressure hydrogen storage (blast waves, fireballs, projectiles) ..... 26
7.1 Fire resistance rating of hydrogen tanks ..... 27
7.2 Safety strategies for inherently safer high-pressure hydrogen storage ..... 28
7.3 Potential hazards and safety issues associated with $cGH_2$: summary ..... 30
8. Leak-no-burst safety technology ..... 30
9. Novel storage techniques ..... 32
9.1 Storage cost ..... 33
9.2 Storage volume, footprint volume and modularity ..... 33
9.3 New 2020 trend ..... 34
10. Utilisation of the e-Laboratory ..... 36
10.1 Blow down of storage tank dynamics ..... 36
10.1.1 Adiabatic model ..... 37
10.1.2 Isothermal model ..... 37
10.2 Fireball scale correlations ..... 39
References ..... 40

# 1. Target audience

The information contained in this lecture is targeted at the level of specialist officer and above. Lectures are also available at levels I – III: Fire fighter, crew commander and incident commander.

The role description, competence level and learning expectations assumed at specialist officer level are described below.

## 1.1 Roll description: Specialist

Specialists assist Incident Commanders with advice and by directing and supervising technical operations that involve the use of knowledge, skills or equipment related to a specific risk or response activity. Typical incidents involve hazardous materials, transportation vehicles, climatic events, structural and other built environment failures and emergency response logistics.

## 1.2 Competence level: Specialist

A scientific, engineering and empirical foundation in the subject area with skills, extended by experience, to apply that information, knowledge in an interpreted and useful way to enable the Incident Commander and other first responders under the specialist's direction to respond effectively and safety to the emergency situation.

## 1.3 Prior learning: Specialist

EQF 5 Comprehensive, specialised, factual and theoretical knowledge within a field of work or study and an awareness of the boundaries of that knowledge. A comprehensive range of cognitive and practical skills required to develop creative solutions to abstract problems. Exercise management and supervision in contexts of work or study activities where there is unpredictable change; review and develop performance of self and others.

# 2. Introduction and objectives

Hydrogen is typically stored and transported in two forms: as a compressed hydrogen gas or as a cryogenic liquid. The most common way to store hydrogen is in metal or composite cylinders/tanks of different sizes and capacities. Sometimes they can be connected into a bundle or gathered onto a basket for transportation. Due to a small size of its molecules, hydrogen is prone to leak easily through some materials, cracks, or poor joints of the storage tanks, as opposed to other common gases at equivalent pressures. Although hydrogen is generally non-corrosive and does not react with the materials used for storage containers, at certain temperature and pressure conditions it can diffuse into a metal lattice causing a phenomenon known as '*hydrogen embrittlement*.' In addition, in case of fires, the composite materials used for storage vessels may degrade and a loss of hydrogen containment may occur. In the worst-case scenario, this may lead to a catastrophic rupture of a hydrogen storage tank,

generating a blast wave followed by a fireball and flying projectiles/missiles. For this reason, hydrogen storage equipment must be designed and maintained to high safety standards to ensure the integrity of the container.

The present lecture gives an overview of hydrogen storage options and also addresses the main safety and technical issues associated with them. It also covers the topics of hydrogen interaction with different types of materials and hydrogen permeation, which are extremely relevant to hydrogen storage technologies. It should be mentioned that the topic of hydrogen storage is vast; thus, this lecture is mainly focused on high-pressure, liquefied and solid hydrogen storage systems, with a close attention to high-pressure storage technology, as it is most common. The phenomena such as unignited releases, fires and explosions will be discussed in the subsequent lectures.

## 3. Hydrogen storage options

Hydrogen storage is an enabling technology across the entire range of Fuel cell and hydrogen (FCH)applications, from on-board vehicles to stationary and portable power generation [1]. There is no universal solution for hydrogen storage. Instead, the solution must be carefully selected to address specific system requirements. For example, the space and weight are critical factors for FC passenger vehicles, whereas weight can be a desirable attribute for FC forklifts or marine applications. For space applications NASA has been utilising liquid hydrogen for years [2].

Hydrogen is the lightest gas with a low normal density of 0.09 g/L (at 288 K and 1 bar). As it follows from Table 1 it has very high energy content per mass of any fuel (about three times more than petrol). However, due to its low density, hydrogen has very low energy content per unit volume (about four times less than petrol). As a result, storing hydrogen, particularly within the size and weight constraints of a vehicle, represents a challenge [3]. The research is underway to develop safe, reliable, compact, light-weight, and cost-effective hydrogen storage technology.

*Volumetric* and *gravimetric capacities* (densities) are two terms often used when describing gas storage approaches. In the case of hydrogen, research activities are geared towards increasing both capacities, i.e. higher both volumetric and gravimetric[1] capacities are desirable. As it is shown in Table 1 there is more energy in 1 kg of hydrogen than in one 1 kg of petrol. However, it is also evident that the same mass of hydrogen occupies a larger volume. Hydrogen is not a liquid at ambient temperature and, therefore, to store the amounts sufficient for a certain driving range on a vehicle (above 500 km) it is necessary to either compress it to very high pressures (for example to 700 bar for automotive applications), or to cool it significantly to

[1] Gravimetric capacity determines the weight of a storage tank required to store a given amount of $H_2$

obtain a liquid form. These extremes of pressure and temperature present safety challenges for the materials used and in the event of a loss of containment.

Table 1. Energy content by weight and by volume for hydrogen and other common fuels [4]

| | Hydrogen | Natural gas | Petrol |
|---|---|---|---|
| **Energy content** per unit mass | **2.8 times** more than petrol | **~1.2 times** more than petrol | **43** MJ/kg |
| **Energy content** per unit volume | **4 times** less than petrol | **1.5 times** less than petrol | **120** MJ/Gallon |

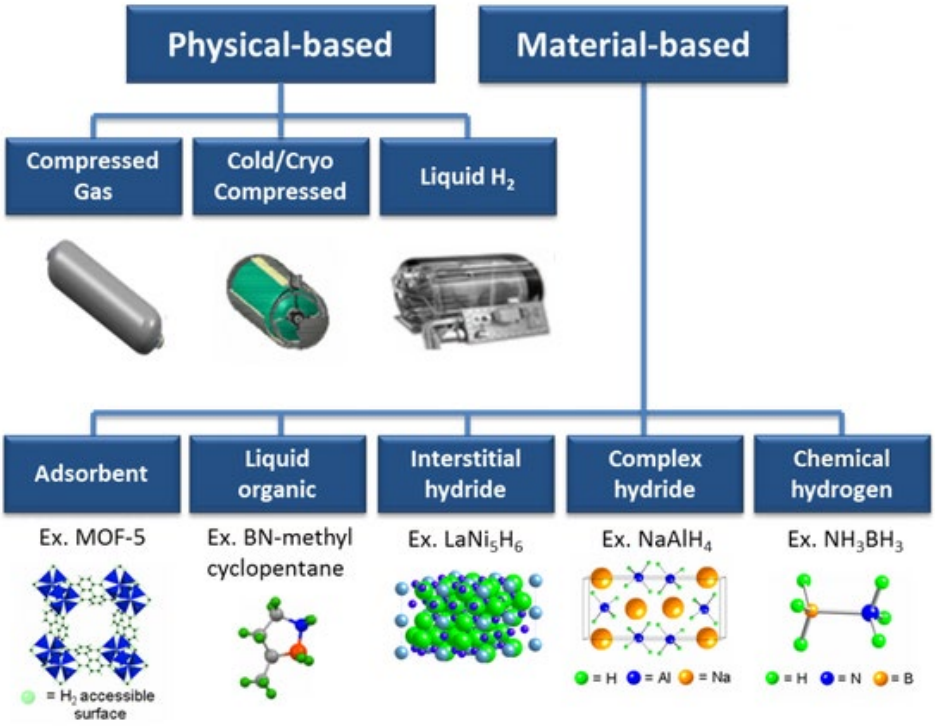


Source: US Department of Energy (DoE): http://energy.gov/eere/fuelcells/hydrogen-storage

Figure 1. An overview of hydrogen storage technologies

Hydrogen can be stored *physically* as a compressed gas ($cGH_2$) or as a cryogenic liquid ($LH_2$). The gaseous hydrogen storage systems typically require compressed gas vessels, i.e. tanks (to withstand up to 700 bar pressure). Storage of hydrogen as a liquid requires extremely low temperatures because its boiling point at 1 atm pressure is -253°C. The $LH_2$ storage is commonly used for bulk hydrogen storage and transportation (please refer to Lecture 'Introduction to FCH applications and hydrogen safety'). Hydrogen can also be stored in *materials*: on the surfaces of solids (by adsorption) or within solids (by absorption) [1]. An overview of hydrogen storage options is given in Figure 1.

Figure 2 from references [5, 6] illustrates the volumetric densities achieved or expected to be achieved for the various storage options in on-board vehicle applications. The US DOE has set targets in their research programme [7] for each of the parameters so that research can be discontinued if it appears that one of the targets cannot be reached.

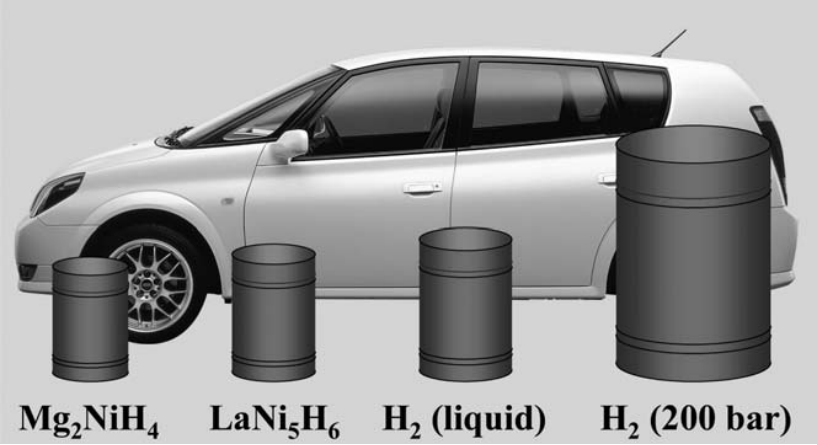


Source: Risø Energy Report 3, 2004.

Figure 2. The volume occupied by 4 kg of hydrogen stored in different ways, relative to the size of a car.

## 4. Storage of gaseous hydrogen

Currently, the most common way of storing hydrogen is as a compressed gas in metal and composite overwrapped cylinders at different pressures. As it was shown in previous lectures many FC applications use hydrogen at higher pressures. In addition to this, the hydrogen compression process increases its volumetric density. Hydrogen for industrial or laboratory use is typically compressed to pressures of 15-20 MPa (150-200 bar). In FC vehicles, hydrogen pressurised to 35-70 MPa is stored in on-board storage tanks. At hydrogen refuelling stations gaseous hydrogen is pressurised (up to 100 MPa) in stages and stored in banks of containers. For examples, three different pressure levels at a refuelling station with gaseous storage can be used: low-pressure storage (in 'cigar' tanks, p=4.5 MPa); medium-pressure storage (in a group of cylinders, p=20-50MPa) and high-pressure storage (in composite cylinders, p=70-100 MPa). The major concerns related to $cGH_2$ are:

- the large amount of energy needed for the compression;
- the stress on the containers' materials caused by repeated cycling from low to high pressures;
- the inherent safety issues for the use of such high pressures in vessels;
- the high weights and additional costs to design such vessels.

Other issues such as hydrogen permeation and embrittlement should be considered as well. Thus, the containers used to store $cGH_2$ must be made of robust materials and must withstand

high pressures without a loss of containment. The design and manufacture, transportation and use of vessels suitable for pressurised hydrogen storage are regulated by government agencies. The designed hydrogen storage vessels (as well as the materials they are made of) should comply with the requirements of RCS developed by ISO, CGA, ASME, and other organisations (more detailed information on relevant RCS is available in the Lecture 'Regulations, codes and standards for Responders').

The following definition will be useful to know:

*Nominal Working Pressure (NWP)* is a gauge pressure, which characterises typical operation of a system. For $cGH_2$ tanks the NWP is a settled pressure of compressed gas in a fully filled container at a uniform temperature of 15 °C [8]. Hydrogen on-board of FC vehicles is typically stored at the NWP of 35 MPa or 70 MPa, with maximum filling pressures of 125% of NWP (43.8 MPa or 87.5 MPa, respectively). Most commonly hydrogen is dispensed at pressures up to 125% of NWP. During a normal (re-)filling process, the pressure inside the container may rise up to 25% above the NWP as adiabatic compression of the gas causes heating within the containers. As the container cools down after refilling, the pressure drops. By definition mentioned above, the settled pressure of the system will be equal to the NWP when the container is at 15 °C.

## 4.1 Types of $cGH_2$ storage vessels

Due to a number of unique hydrogen properties (please see the Lecture 'Hydrogen properties relevant to safety') hydrogen should be compatible with the materials the walls of the storage tanks are made of. Four types of vessels have been developed and used for hydrogen transportation and storage:

- Type I: made of metal seamless metallic container
- Type II: seamless metallic container hoop-wrapped with fibre resin composite
- Type III: metallic liners fully wrapped with fibre resin composite
- Type IV: polymeric liner fully wrapped with fibre resin composite

In 2014 the first prototype of type V tank was produced. It is an all-composite vessel without a liner [9]. The schematic representations of the vessel's types used for $cGH_2$ are shown in Figure 3.

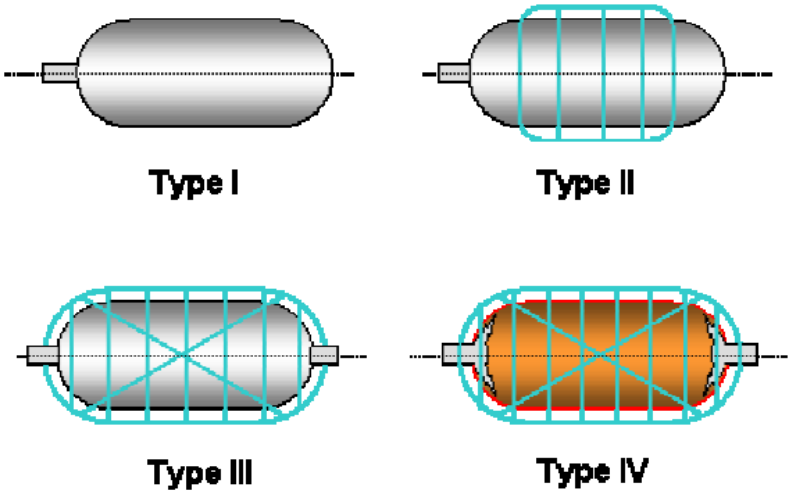


Source: Barthelemy, 2009 [10].

Figure 3. Types of hydrogen tanks used for compressed gaseous hydrogen storage

The pressure, at which hydrogen will be stored at, mainly affects the thickness of the storage container walls, the size/weight of the containers, the choice of materials, and the costs. Usually, three types of materials are used for design and manufacturing of hydrogen storage tanks: metals (aluminium or steel), polymers (high-density polyethylene or polyamide) and carbon fibres impregnated with thermoset or thermoplastic resins. Metals should neither allow hydrogen permeation nor be subjected to hydrogen embrittlement, especially if they are to undergo an extensive pressure/temperature cycling during their lifetime. The hydrogen tanks are designed for a minimum burst pressure, with the minimum wall thickness dictated by the metal's tensile strength [9] or solely by composite strength in case of Type IV tanks, where liner is not load-bearing. Although the design of hydrogen tanks has been improved in the recent years, particularly through the application of light-weight materials such as polymers and aluminium, the issues of large volumes and heavy weights still remain. For example, the mass of hydrogen stored in a metal cylinder is only about 1% of its total mass [11].

Type I vessels are seamless containers made of steel or aluminium. They are very heavy, with thick walls. Type I tanks designed for pressures not higher than 25 MPa. Type I vessels used in compressed natural gas (CNG) vehicles and can be considered as a relatively cheap storage option for some stationary applications. Type II vessels have seamless metallic tanks hoop-wrapped with fibre resin. They are also very heavy and can withstand pressures up to 45-80 MPa. These tanks can be used as high-pressure buffers at hydrogen refuelling stations. Their cost is competitive due to a relatively low number of fibres used (Figure 3). Both type I and type II vessels are not suitable for automotive applications due to heavy weights and large sizes.

Types III and IV vessels are usually lighter and have thinner walls compared to types I and II containers. Type III vessels with NWP of 35 MPa have seamless or welded aluminium liners fully wrapped with fibre resin composite. The materials used are less affected by hydrogen embrittlement. Type IV vessels with NWP of 70 MPa are made of non-metallic (i.e. plastic)

liners followed by fibre/resin composite load-bearing external layer. Metallic bosses are also available for shut-off valves and thermally activated pressure relief device (TPRD) installation. The fibre wrapping around the polymeric liner provides the required level of strength to contain pressurised hydrogen, while the liner mainly acts as a permeation barrier [11]. The minimum burst pressure ratios for composite overwraps with different fibres, i. e. the minimum actual burst pressure of the container divided by its normal working pressure (NWP), should not be smaller than the values given in Table 2.

Table 2 Minimum burst pressure ratios of different types of hydrogen vessels

| Construction | | Container type | | | |
|---|---|---|---|---|---|
| | | Type 1 | Type 2 | Type 3 | Type 4 |
| All metal | | 2,25 | | | |
| Over-wrap | Glass | | 2,4 | 3,4 | 3,5 |
| | Aramid | | 2,25 | 2,9 | 3,0 |
| | Carbon | | 2,25 | 2,25 | 2,25 |
| | Hybrid | | (1) | | |

*Explanatory note:*

(1) For container designs using hybrid reinforcement, i.e. two or more different structural fibre types, consideration shall be given to the load share between the different fibres based on the different elastic moduli of the fibres. The calculated stress ratios for each individual structural fibre type shall conform to the specified values. Verification of the stress ratios may also be performed using strain gauges. The minimum burst pressure ratio shall be chosen such that the calculated stress in the structural fibres at the minimum burst pressure ratio times nominal working pressure divided by the calculated stress in the structural fibre at nominal working pressure meets the stress ratio requirements for the fibres used.

In the course of the revision of GTR No. 13 Phase 2 [32] a decision has been made to reduce the minimum burst pressure from 225% to 200% of the nominal working pressure (NWP). It is worth mentioning that the author has argued against this reduction in the committee [33]. A minimum burst pressure of 2 times NWP corresponds to only 160% of the maximum service pressure expected during service.

Although these cylinders are lighter than those containing all-metal liners, they are more expensive. The disadvantage of type IV tanks is a possibility of hydrogen permeation through the polymeric liner. Currently, these types of tanks are preferably used for automotive applications (forklifts, cars, buses, etc.).

The examples of storage vessels, which can be found at stationary applications include: a bundle or a basket of cylinders, fixed tube bundles or tube trailer used to deliver hydrogen to refuelling stations (Figure 4).

(a)  (b) 

Source: AirLiquide Image Bank

Figure 4. The examples of hydrogen storage vessels common for stationary applications: (a) fixed bundle of cylinders, (b) a basket of cylinders.

## 4.2 On-board hydrogen storage

As mentioned earlier, the most suitable vessels to store hydrogen on-board of vehicles are Type III and Type IV. These technologies are also widely used for storage of other gases (e.g. natural gas or air), but the main difference is the need for much higher pressures in the on-board hydrogen storage: 35 to 70 MPa for hydrogen compared to 20 MPa for natural gas. Hydrogen storage systems installed on-board should perform the following functions:

- to receive hydrogen during (re-)fuelling;
- to contain hydrogen until needed;
- to release hydrogen to FC system to power the vehicle.

Currently, FC vehicles use tanks that store $cGH_2$. The on-board storage of $LH_2$ is not widely used commercially used in vehicles at the present time [4]. Implementation of $LH_2$ for automobile applications is under development as a cutting-edge technology. The on-board hydrogen system usually contains: a single or several $cGH_2$ storage tank(s), a refueling receptacle, and hydrogen fuel lines. The tanks are usually located in the rear of the vehicle. Each tank is equipped with its own TPRD. In case of fire, TPRDs will release hydrogen either individually or they can be routed to a single vent location. The direction of hydrogen release from TPRD is vertically downwards or at slight angle, when a car is normal position, with four wheels on the ground [4, 8]. The hydrogen fuel lines contain hydrogen at much lower pressures (from ambient to about 0.7 MPa) than in the tanks. The lines are made of stainless steel compatible with hydrogen. An example of a FC vehicle, Toyota Mirai, and its hydrogen storage tanks (70 MPa) are shown on Figure 5. More detail about this car can be found on: http://www.toyota.com/mirai/fcv.html

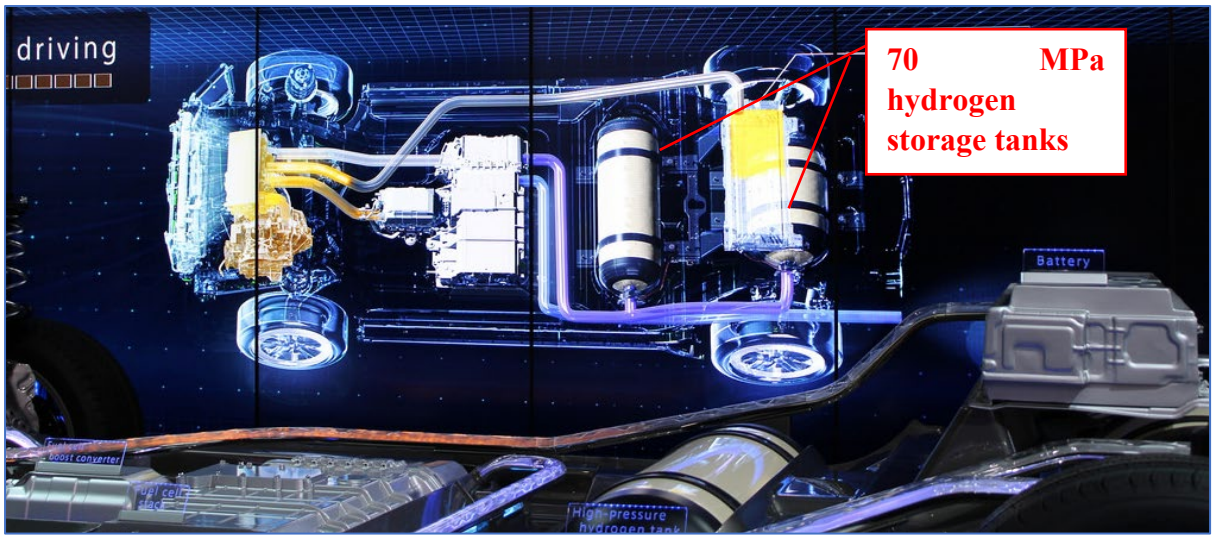


(a)




(b)

Source: Google Images, loyalty free.

Figure 5. (a) Main components of Toyota Mirai FC vehicle, and (b) its hydrogen storage tank.

Today's light-duty passenger fuel cell vehicles (FCVs) typically store up to 6 kg of hydrogen on-board needed to provide a driving range in the region of 400-500 km [4]. Similar to CNG buses, the hydrogen fueled buses store hydrogen on the roof in several tanks. The fuel cell stack is usually located in the rear engine compartment of the bus. Up to 50 kg of hydrogen can be stored on-board of a FC bus. Not only car manufacturers like Toyota or Honda produce hydrogen storage tanks, but also companies such as Lincoln Composites, Plastic Omnium, Dynatek Industries, Quantum Technologies and others.

A cross-section of Type IV tanks produced by Quantum Technologies is shown in Figure 6. The tank has:

- an impact resistant foam dome, which is light-weight, energy absorbing, and cost-competitive;
- an impact resistant outer shell, which is bullet-proof and provides the tank with cut/abrasion resistance;

- a carbon fibre reinforced plastic (CFRP) shell, which is light-weight, corrosion-, fatigue-, creep-, and relaxation-resistant;
- a polymeric liner, which is light-weight, corrosion resistant and serves as a permeation barrier.

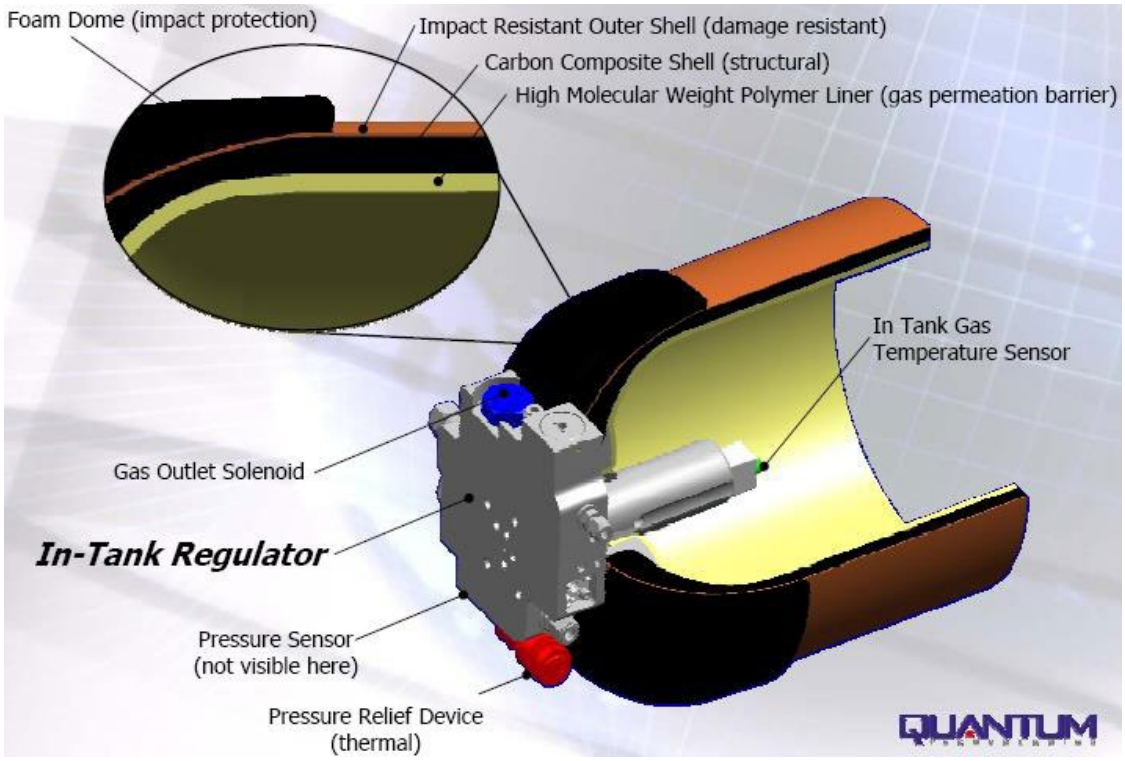


Source: Warner, 2005 [12]

Figure 6. A cross-section of a Quantum hydrogen tank wall with integrated fuel storage systems

A general view of the Quantum Technologies 70 MPa composite tanks with the key safety and communication features are shown in Figure 7. These tanks are extremely robust and much stronger than petrol tanks which can be made of plastic.

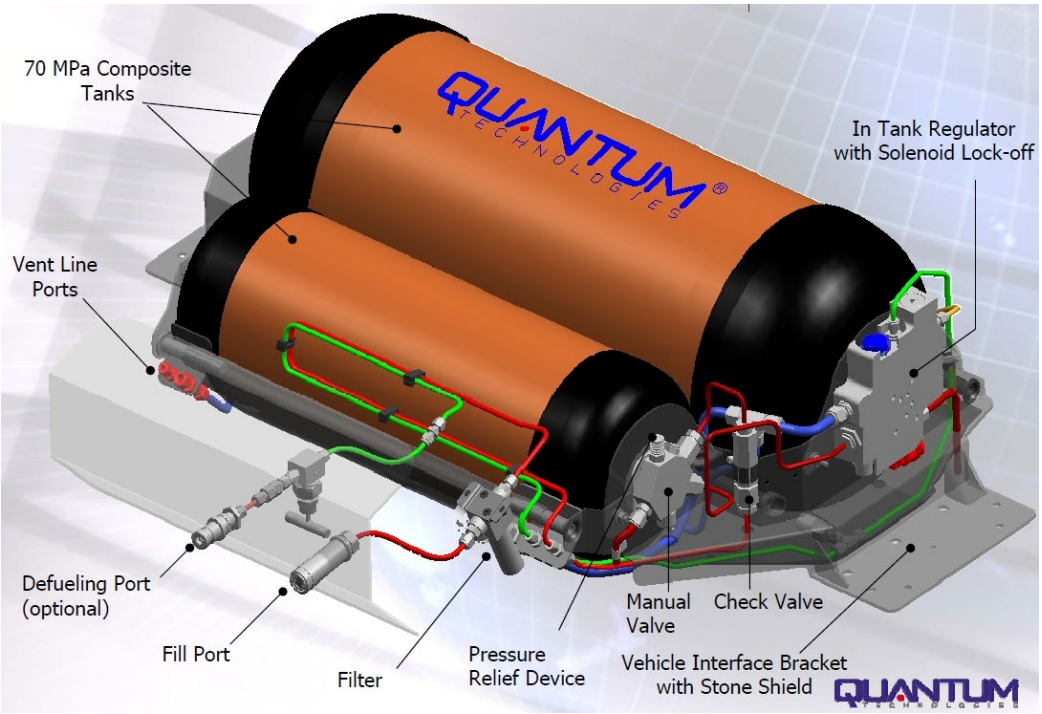


Source: Source: Warner, 2005 [12]

Figure 7. Type IV compressed gaseous hydrogen storage tank by Quantum Technologies

The main issue for the type IV tanks is hydrogen permeation through the polymeric liner. According to the EU regulation the permeation rate of hydrogen (at 20 ºC) for a FC car should not exceed 6 Nml/hr/L to avoid formation of flammable composition in a worst credible scenario of a private garage with ventilation rate 0.03 air-changes per hour (ACH) [13]. The permeation phenomenon will be discussed further in this lecture. Hydrogen permeation through the polymeric liner can lead to its accumulation in the space between the liner and CFRP forming a 'blister'. This may cause a partial or full collapse of the liner, when the pressure of the accumulated hydrogen becomes higher than the internal pressure of the liner (e.g. during tank depressurisation). Therefore, the development of specialised polymers is much needed to address this problem.

## 4.3 Pressure Relief Devices

The main safety feature of the hydrogen storage systems (both for automotive and stationary applications) is *pressure relief devices (PRDs)*, with the definition given as follows: a PRD is a safety device that protects against a failure of a storage vessel by releasing some or the entire tank content in the event of high temperatures, high pressures or a combination of both [14]. In the event of a fire, *Thermally Activated Pressure Relief Device (TPRD)* provides a controlled release of the gaseous hydrogen $GH_2$ from a high pressure storage container before its walls are weakened by high temperatures, leading to a *catastrophic rupture*. TPRDs vent the entire contents of the container rapidly. They do not reseal or allow re-pressurization of the container for hydrogen systems.

Hydrogen storage vessels and their TPRDs that have been subjected to a fire are expected to be removed from service and destroyed [8]. PRDs are designed according to codes and standards. PRDs should be manufactured, installed, operated, maintained, inspected, and repaired according to laws and rules of local jurisdictions [15]. According to the European Commission Regulation (EU) No 406/2010, the on-board hydrogen storage must be fitted with PRDs/TPRDs [13].

The PRDs are designed to open when pressure or temperature reaches a certain limit. TPRDs open if temperature is above 108-110 ºC. Hydrogen tanks should be protected with the non-reclosing TPRDs (note that CNG vehicles usually equipped with reclosing PRDs). There are many types of PRDs available on the market. The most common ones include a fusible metal plug, a glass bulb or a bayonet (Figure 8). A fusible metal plug inside the PRD melts, when temperatures are higher than 110 ºC, opening and venting the entire content of the tank. A glass bulb in a PRD (Figure 8a) is hollow and contains liquid. Upon heating the bulb breaks down; frees the poppet to move to the left. This opens the O-ring seal and vents the gas through the radial ports. A bayonet PRD (Figure 8b) upon reaching its triggering temperature (*ca.* 124 °C) melts and allows the ball bearing to move and release the spring, which punctures the safety disk with a bayonet. The content of the storage tanks is released through the hollow bayonet.

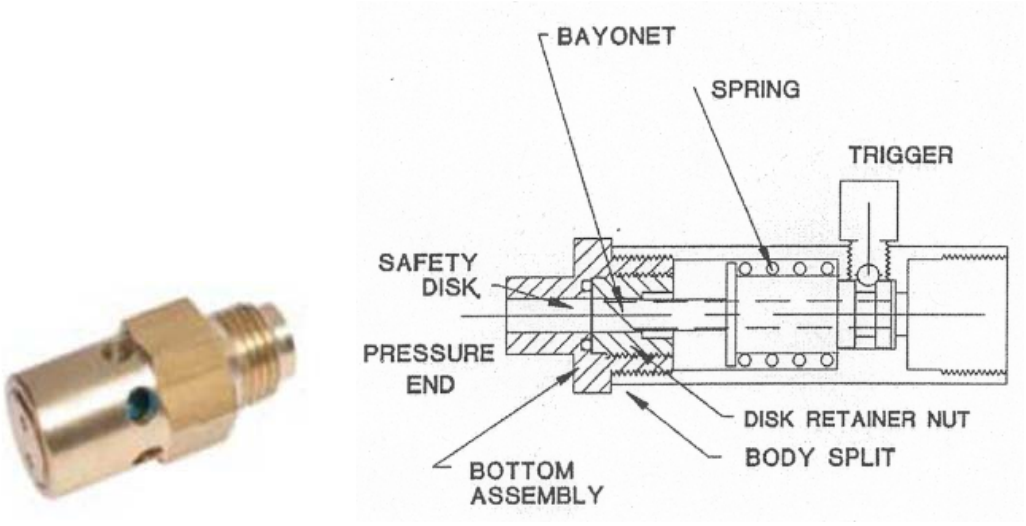


(a) (b)

Figure 8. Glass bulb (a) and bayonet (b) types of PRDs.

Without a PRD, overheating of the storage tank may result in its catastrophic failure, releasing the flammable gas and the large amount of stored mechanical energy due to the compression. ‘Even without the chemical energy from gas flammability, the mechanical release of pressure can cause the tank to break its restraints, pierce any containment provided by the vehicle body and fly great distances. With the PRD in place, the controlled release may result in an intense flame for a short time (until pressure in the tank is relieved), but the overall risk is likely to be reduced’ [16].

Unfortunately, even when PRDs are installed, they might fail in different modes: either by a premature activation or by failing to vent properly, or by failing to activate at all – which is the most dangerous scenario. The reasons for PRDs failures are different. PRDs can be blocked by dirt, stones or ice and thus fail to act when necessary. They can become corroded or otherwise damaged such that they relieve pressure when they should not be. The videos recorded by the Southwest Research Institute during the tests when PRDs failed to open both on CNG and hydrogen storage tanks can be found here: http://depts.washington.edu/vehfire/begin.html

According to Global Technical Regulations (GTR) on Hydrogen-Fuelled Vehicles (2013), a PRD should be a 'non-reclosing and a thermally activated device. It should be directly installed into the opening of a container, or at least one container in a container assembly, or into an opening in a valve assembled into the container, in such a manner that it shall discharge the hydrogen into an atmospheric outlet that vents to the outside of the vehicle. It shall not be possible to isolate the PRD from the container protected by the PRD, due to the normal operation or failure of another component' [8].

Also as per requirements of the GTR [8] the discharge of hydrogen gas from PRD shall not be directed:

- towards exposed electrical terminals, exposed electrical switches or other ignition sources;
- into or towards the vehicle passenger or luggage compartments;
- into or towards any vehicle wheel housing;
- towards any class 0 component;
- forwards from the vehicle, or horizontally from the back or sides of the vehicle [8].

The direction of a TPRD hydrogen release is indicated on Figure 9 [4].

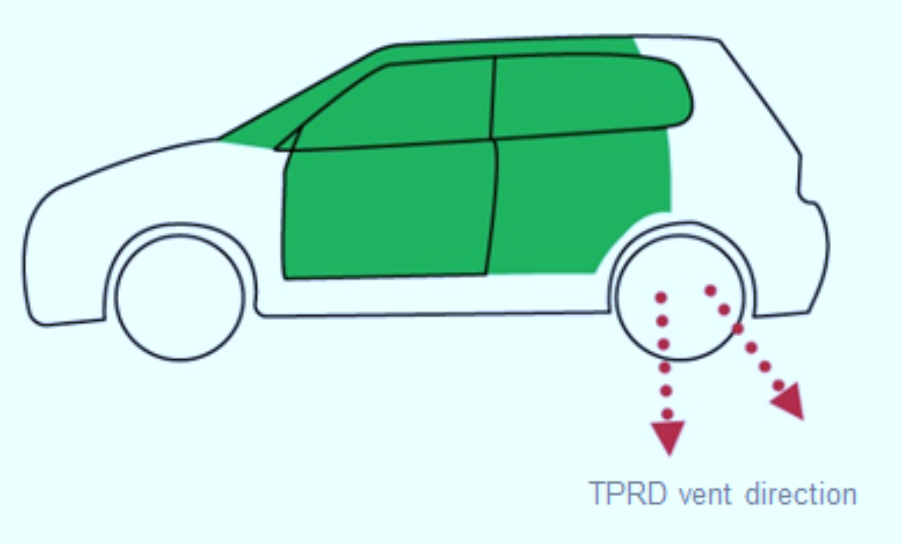


Figure 9. Possible directions of hydrogen release in case of TPRD activation in a FC car

## 4.4 Testing of $cGH_2$ tanks

All types of vessels for storage of $cGH_2$ should be designed, manufactured, tested, and maintained in accordance with relevant codes and standards. The testing of materials and storage is carried out on national and international (GTR) level. The examples of some types of test of hydrogen storage include [4, 8]:

- *Bonfire test*. The tank shall vent through the non-reclosing TPRD and shall not fail when exposed to a bonfire of 20 minutes duration. The conditions of this test will be discussed in the current lecture in detail.
- *Hydrostatic burst test*. The pressure, at which the tank bursts, typically more than 2.25 times of the working pressure.
- *Ambient pressure cycling test*. Hydrogen tanks shall not fail before reaching 11,250 fill cycles (representing a 15-year life of use in commercial heavy-duty vehicles).
- *Penetration test*. The tank shall not rupture when an armour piercing bullet or an impactor with a diameter of 7.62 mm or greater fully penetrates its wall.
- *Leak-before-break test*. The tank shall fail by leakage or shall exceed the number of filling cycles (11,250).

The goal of all the tests is that the tanks vent and do not rupture [4].

Let us consider the *bonfire test* in detail as it has high relevance to responders. The selected RCS relevant to bonfire test are indicated in Table 3.

Table 3. Selected RCS applicable to bonfire tests of high-pressure hydrogen storage tanks [36].

| **RCS** | **Title** | **Country** | **Year** |
|---|---|---|---|
| SAE J2578 | General fuel cell vehicle safety | U.S. | 2002<br>2009 re-published |
| SAE J2579 | Fuel systems in fuel cell and other hydrogen vehicles | U.S. | 2008<br>2009 re-published |
| JARI S001 | Technical standard for containers of compressed hydrogen vehicle fuel devices | Japan | 2004 |
| ISO 15869 | Gaseous hydrogen and hydrogen blends - Land vehicle fuel tanks (Technical Specification) | International | 2009 |
| EU regulation 406/2010 | Implementing EC Regulation 79/2009 on type-approval of hydrogen-powered motor vehicles | EU | 2010 |

| | | | |
|---|---|---|---|
| GTR 2013 | Global Technical Regulation (GTR) on hydrogen and fuel cell vehicles. (ECE/TRANS/WP. 29/GRSP/2013/41). | International | 2013 |

The latest version of the GTR [8] requires that hydrogen storage container is fitted with a TPRD, a check valve, a shut-off valve and any additional features including vent line(s) and vent line covering(s) and any shielding affixed directly to the container (such as thermal wraps and coverings/barriers over TPRD(s)). A hydrogen storage system is pressurised to the NWP and exposed to fire, for 10 minutes in a localised fire (i.e. when only portion of the tank exposed to flames) and then progressing to an engulfing fire stage. A high-pressure container shall vent through a TPRD in a controlled manner (to pressures below 1 MPa) without a rupture. In case, if the need to empty the content of hydrogen tank arises, the PRD will release gas off the vehicle, towards the ground and most likely producing violent hydrogen flame for a short period of time. The tank systems typically release hydrogen (blow-down) within a few minutes [4, 8].

The procedures for the bonfire test (both in localized and in engulfing region) are depicted in Figure 10. More details about the test conditions and protocols are given in Tables 3-6.

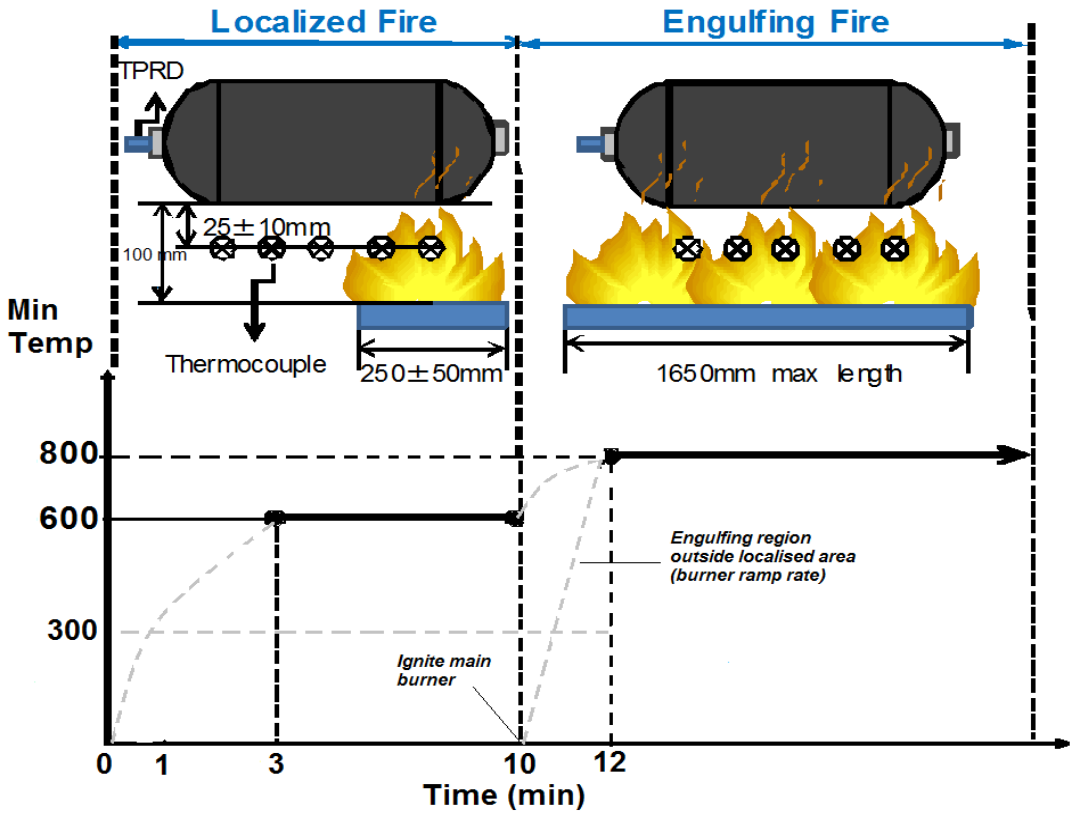


Figure 10. The bonfire test progression in time [41].

Table 5 details how the hydrogen tank should be positioned for the engulfing stage of bonfire test depending on its size and the number of TPRDs.

- The container may also be subjected to engulfing fire (without localised stage) when no shielding components attached to it. The list of actions and set temperatures for localised/engulfed regions of the bonfire test are indicated in Table 6. The summary of the conditions for the engulfing fire test is given in Table 7. The arrangement of the fire should be recorded in sufficient detail to ensure the rate of heat input to the test article is reproducible. The thermocouples' (TCs) temperatures and a container pressure should be recorded at intervals of every 10 sec/30 sec or less during the test. Any failure to maintain specified minimum or maximum temperatures invalidates the test results. Any failure or inconsistency of fire source should invalidate the test results. The results of the test include:
- the elapsed time from ignition of the fire to the start of venting through the TPRD(s);
- the maximum pressure and time of evacuation until a pressure of less than 1MPa/0.7MPa is reached.
- Unfortunately, the GTR do not include bonfire testing of tanks without TPRDs, which can give the valuable results on *fire resistance rating* of the tanks.

Table 4. A summary of conditions for a test started as a localised fire, GTR [8]

| | |
|---|---|
| **Test method** | Method 1, generic installation test (without protective devices, only thermal shielding)<br>Method 2 for specific vehicle installation (includes protective devices and other vehicle components) |
| **Pressure in the container** | 100% of nominal working pressure (NWP) |
| **Medium in the container** | Compressed hydrogen/compressed air can be used if agreed in certain regions/countries |
| **Distance from the container to the fire source** | 100 mm |
| **Fire source** | LPG burners configured to produce uniform minimum temperature |
| **Fire source length** | 1.65 m |
| **Number and the location of thermocouples (TCs)** | Minimum 5 TCs covering the length of the container up to 1.65 m maximum. At least 2 TCs are in localized area and at least 3 TCs equally spaced no more than 0.5 m apart in the remaining area |
| **Position of TCs** | 25±10mm from outside surface of the container along its longitudinal axis |
| **Additional TCs** | At TPRD sensing point or at any other location |
| **Wind shields** | To ensure uniform heating |

| | |
|---|---|
| **Length and width of localised fire** | 250±50 mm and the width encompasses the entire diameter of the tank |
| **Localized fire exposure area** | Area furthest from TPRD(s) – generic installation (Method 1) |
| | The most vulnerable area should be identified for specific vehicle installation (Method 2). This area, furthest from TPRDs, positioned directly over the fire source |
| **$T_{min}$ of TCs in localized area** | 600 °C - from 3 to 10 mins of fire exposure. |
| **Start of engulfing fire** | Main burner is ignited at 10 mins of the test and fire source is extended to 1.65 m. After 12 mins of exposure the temperature should be increased to at least 800 °C |
| **$T_{min}$ of TCs within engulfing region** | 800 °C – from 12 mins until release of hydrogen via TPRD(s) |
| **Duration of the test** | Test continues until the system vents through a TPRD and the pressure falls to less than 1 MPa. The venting shall be continuous (without interruption), and a storage system shall not rupture. An additional release through a leakage (not including release through a TPRD) that results in a flame with length greater than 0.5 m beyond the perimeter of the applied flame shall not occur. |

Table 5. A position of a container above the fire [8]

| **Container length** | **Number of TPRDs** | **Position of a container** |
|---|---|---|
| **≤1.65 m** | 1 | Horizontal; centrally above the fire source |
| **>1.65 m** | 1 PRD at one end of a container | Horizontal; above the fire source that commences at the opposite end of a container |
| **>1.65 m** | >1 PRD along the length of a container | Horizontal; centrally above the fire source, centre of which is located midway between those PRDs that are separated by the greatest horizontal distance |

Table 6. Protocols for the bonfire test as stated in GTR [8]

| | **Localized fire region** | **Time period, min** | **Engulfing fire region (outside the localized fire region)** |
|---|---|---|---|
| **Action** | **Ignite burners** | **0-1** | **No burner operation** |
| **$T_{min}$** | Not specified | - | Not specified |
| **$T_{max}$** | <900°C | - | Not specified |

| | | | |
|---|---|---|---|
| **Action**<br>$T_{min}$<br>$T_{max}$ | **Increase temperature and stabilize fire for start of localized fire exposure**<br>**>300°C**<br><900°C | **1-3**<br>-<br>- | **No burner operation**<br>Not specified<br>Not specified |
| **Action**<br>$T_{min}$<br>$T_{max}$ | **Localized fire exposure continues**<br>1-minute rolling average **>600°C**<br>1-minute rolling average <900°C | **3-10** | **No burner operation**<br>Not specified<br>Not specified |
| **Action**<br>$T_{min}$<br>$T_{max}$ | **Increase temperature**<br>1-minute rolling average >600°C<br>1-minute rolling average <1100°C | **10-11** | **Main burner ignited at 10 mins**<br>Not specified<br>Not specified |
| **Action**<br>$T_{min}$<br>$T_{max}$ | **Increase temperature and stabilize fire for start of engulfing fire exposure**<br>1-minute rolling average >600°C<br>1-minute rolling average <1100°C | **11-12** | **Increase temperature and stabilize fire for start of engulfing fire exposure**<br>> 300°C<br><1100°C |
| **Action**<br>$T_{min}$<br>$T_{max}$ | **Engulfing fire exposure continues**<br>1-minute rolling average **>800°C**<br>1-minute rolling average <1100°C | **12 – end of the test** | **Engulfing fire exposure continues**<br>1-minute rolling average >800°C<br>1-minute rolling average <1100°C |

Table 7. A summary of conditions for engulfing fire test [8]

| | |
|---|---|
| **Medium in the container** | Compressed hydrogen at 100% of NWP |
| **Fire source length** | 1.65 m |
| **Number of TCs** | Minimum 3 TCs suspended in the flame approx. 25 mm below the bottom of the container |
| **Distance to the fire source** | 100 mm |
| **Metallic shielding** | To prevent direct flame impingement on container valves, fittings, or PRDs. Metallic shielding should not be in direct contact with fittings |
| **Arrangement of TCs** | Thermocouples may be attached to steel cubes up to 25 mm on a side |
| **$T_{min}$ of TCs** | Within **5 minutes** after fire is ignited, an average flame temperature should not be less than **590 °C** (determined by the average of two TCs recording the highest temperatures over 60 seconds interval) |

| | |
|---|---|
| **Measurements** | Temperatures of TCs and a container pressure shall be recorded every 30 seconds during the test |
| **Duration of the test** | Until container fully vents (pressure falls below 0.7MPa) |

## 5. Liquefied hydrogen storage

Storage tanks for $LH_2$ can hold more hydrogen compared to those for $GH_2$: volumetric capacity of $LH_2$ is 0.070 kg/L as opposed to 0.030 kg/L for $GH_2$ tanks at 70 MPa. However, a significant amount of energy (around 30% of the energy contained in hydrogen) is required for liquefaction. Hydrogen may be liquefied for a simplified transport or storage. All of the major industrial gas suppliers have cryogenic delivery tankers. $LH_2$ is used at hydrogen refuelling stations and in airspace applications.

As you may already know from previous lecture, the normal boiling temperature of hydrogen is extremely low: 20.3 K (-253 ºC). The volume expansion ratio of $LH_2$ to $GH_2$ is 848. $LH_2$ stored at low (cryogenic) temperatures and at pressures of around 0.6 MPa. An appropriate and sufficient level of tanks insulation is needed to prevent the release of evaporated gas. The costs of materials suitable for $LH_2$ storage tanks as well as the volumes and weights of tanks are significantly higher than those for $GH_2$.

The $LH_2$ storage tank is a Dewar, double-walled, vacuum-insulated vessel made of lightweight steel alloys. There is no permeation, as the double-walled tank retains vacuum between the walls. The $LH_2$ storage has a major challenge. The inherent heat input from the environment may lead to warming and boiling of $LH_2$ inside the tank. When the pressure in the storage vessel remains constant the vapours produced from boiling of $LH_2$ are called boil-off. These vapours can be released through venting. The boil-off (evaporation of $LH_2$) can be caused by the following factors:

- *Ortho- para-hydrogen conversion*: conversion of ortho- to para-hydrogen is an exothermic reaction. If the unconverted normal hydrogen is placed in a storage vessel, the heat of conversion will be released within the container, which leads to the evaporation of the liquid.
- *Residual thermal leaks*: the heat leakage losses are proportional to the ratio of surface area to the volume of the storage vessel. The shape of cryogenic vessel should be spherical since it has the least surface to volume ratio. A big cause of heat leaks in cryogenic storage is through the support struts in the vessel.
- *Sloshing*: a motion of $LH_2$ in a vessel due to acceleration or deceleration, which occurs during its transportation by tankers. Some of the impact energy of the liquid against the vessel is converted to thermal energy.
- *Flashing:* occurs when $LH_2$ at a high pressure is transferred from trucks and rail cars to a low pressure vessel.

The main components of on-board $LH_2$ tank are shown on Figure 11. They include:

- $LH_2$ storage container,
- Shut-off devices,
- A boil-off system,
- Pressure Relief Devices (PRDs),
- The interconnecting piping (if any) and fittings between the above mentioned components.

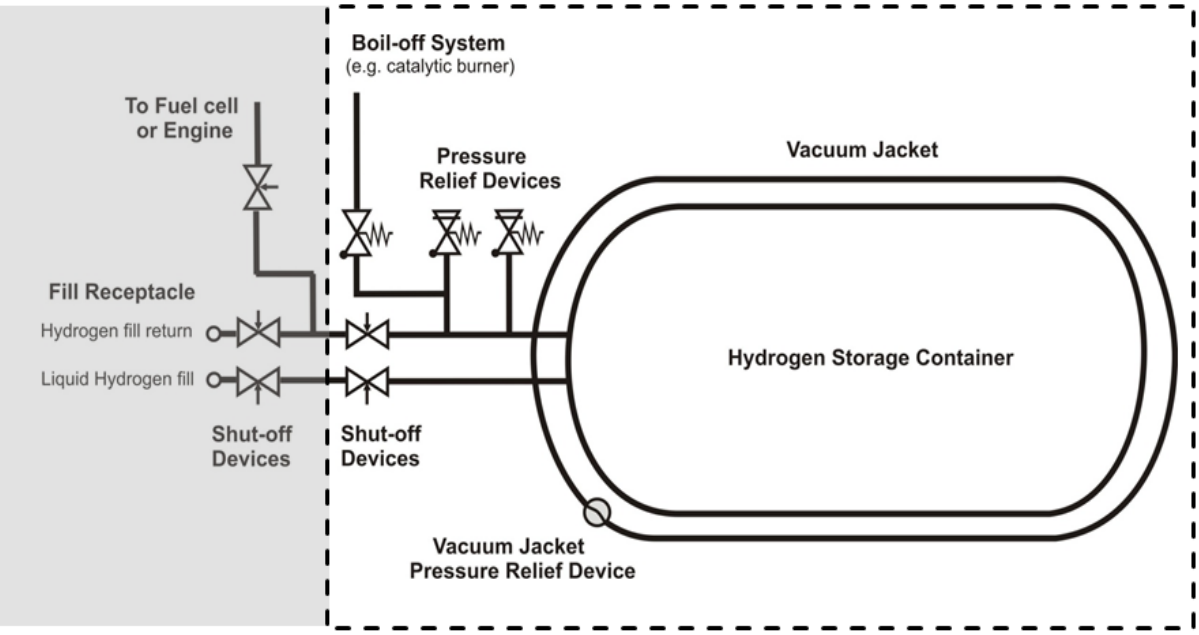


Figure 11. A schematic representation of $LH_2$ storage system from Ref. [17]

Some safety issues associated with $LH_2$ storage are discussed below:

1. A loss of $LH_2$ containment. A damage of the external tank walls can lead to the disruption of vacuum, causing heating and subsequent pressure rise inside the vessel. This should be avoided wherever possible.
2. Formation of oxygen-enriched atmospheres. The condensed air may form oxygen enriched atmospheres in the vicinity of $LH_2$ storage. The solid deposits formed by condensed air and $LH_2$ could be enriched with oxygen. This poses a risk of explosion if the external wall tank is damaged. The mechanism is considered as a possible reason for a powerful secondary explosion occurred during large-scale LH2 release experiments at HSL [18].
3. The boil-off. It raises concerns when vehicles are parked for a long time as the pressure build-up is possible until the boil-off valves open.

4. Ice formation. Low temperatures may result in ice build-up on the storage elements (e.g. valves, Dewar's) leading to an excessive exterior pressures, and to a possible rupture of the vessel.

In case of a $LH_2$ leak or spill, a hydrogen cloud will be formed. This cloud may flow horizontally for some distance or even downward, depending on the terrain and weather condition. The ignition of $LH_2$ vapour cloud is possible. For examples, recent experiments carried out at HSL (UK) found that the ignitions occurred in 10 of the 14 tests [19].

Cryo-compressed storage combines storage of hydrogen at cryogenic temperatures in a vessel that can be pressurised (e.g. to 35 MPa), as opposed to current $LH_2$ vessels which employ near-ambient pressures. Liquid hydrogen or cold compressed hydrogen can be stored. This technology, which is still at R&D stage, was developed by Lawrence Livermore National Laboratory (LLNL) and BMW Group. It has the following advantages:

- higher hydrogen density compared to $LH_2$ and $GH_2$ storage options;
- potential improvement in weight, volume and overall costs of tanks;
- significantly lower theoretical energy of cryogenic hydrogen associated with tank rapture;
- lower evaporative losses than liquid hydrogen tanks, and are much lighter than metal hydrides.

## 6. Solid storage of hydrogen

In the introductory lecture it was highlighted that hydrogen can also be stored either chemically or physically in certain materials (Table 8). There are several mechanisms known for storing hydrogen in materials: absorption, adsorption or chemical reaction. This technology, is currently at R&D stage, does not require high pressures or low temperatures. In contrast to $cGH_2$ and $LH_2$ storage options, the accidental loss of confinement may only happen if the materials are heated leading to a release of hydrogen [20].

Table 8. A range of materials used for storage of hydrogen in solids

| **Carbon and High Surface Area materials** | **Chemical hydrides (hydrolysis)** | **Rechargeable hydrides** | **Chemical hydrides (thermal decomposition)** |
|---|---|---|---|
| • Activated carbon<br>• Nanotubes and graphite nanofibres<br>• Buckyballs | • Encapsulated sodium hydride (NaH)<br>• Lithium, calcium magnesium hydrides | • Alloys and intermetallic compounds<br>• Complex compounds | • Aluminium hydride<br>• Ammonia borozane |

| | | | |
|---|---|---|---|
| • Zeolites<br>• Metal organic frameworks (MOF)<br>• Clathrate hydrates | • Complex hydrides $LiALH_4$; $NaAlH_4$ | • Nanocrystals | |

As you can see there are many options: rechargeable hydrides, chemical hydrides, carbon and other High Surface Area (HSA) materials. The most developed option is metal hydrides (potential for > 8 wt. % $H_2$ and > 90 kg/m$^3$ hydrogen-storage capacities at 10-60 bar). Hazards and safety issues associated with solid storages are indicated below:

- Pyrophoric materials: can react spontaneously in air (vigorous reaction, heating, ignition).
- Stability: many hydrides oxidize or react with water violently.
- Toxicity: e.g. metal hydrides are toxic to humans.
- Heat management: cooling is required as materials release heat upon hydrogen uptake.
- Risk of dust cloud explosions: even for non-pyrophoric compounds.

There are also some technical and other issues such as: weight, lower desorption temperatures, recharge time and pressure, high costs, cyclic life, container compatibility and optimisation.

## 7. Consequences of catastrophic failure of high-pressure hydrogen storage (blast waves, fireballs, projectiles)

What happens if TRPD fails to activate in a fire? The studies carried out at the Southwest Research Institute, USA [21, 22] demonstrated that the catastrophic rupture of the tank will occur. Two types of tanks (type III and type IV), not equipped with TPRDs, pressurised to about 35 MPa and containing only 1.64 kg of hydrogen were tested. The fire was created by a propane burner. Type IV (with high-density polyethylene liner, carbon fibre structural layer, and fiberglass outer layer) tank, 72.4 L in capacity and with dimensions of L × D = 84 × 41 cm was tested stand-alone. The Heat Release Rate (HRR) for the fire was 370 kW. Pressure inside the vessel P was at 34.3 MPa. Type III tank (with capacity of 88 L and L × W = 4.5 × 1.8 m) was placed under a typical Sports Utility Vehicle (SUV), 28 cm above the ground. HRR = 265 kW, P = 31.8 MPa. The internal cylinder temperature and pressure increased only marginally (due to a low thermal conductivity of CFRP), from 27 to 39 ºC and from 34.5 to 35.7 MPa, during the final period between 6 min and 6 min 27 s of fire exposure, which culminated in a catastrophic rupture of Type IV tank. The reason for this is not pressure increase but degradation of the outer shell of the tank. The burning of tank composite layers started in 45 s for Type IV and 20 s for Type III, gauged by the appearance of black soot. The failure time, after fire initiation (i.e. fire resistance) was measured as 6 min 27 s for Type IV and 12 min 18

s for Type III tank. It was observed that the flame entered the SUV interior just after 4 minutes. Therefore, if the passengers are inside the vehicle, their successful escape or rescue would have had to be accomplished within this short period of time [21].

For Type IV (stand-alone) tank, the measured peak pressures form the *blast wave* varied from 300 kPa at 1.9 m, to 41 kPa at 6.5 m. The highest pressure was in a direction perpendicular to the tank longitudinal axis. It is worth mentioning here that pressures above 83 kPa lead to severe injuries or death [23]. For Type III tank (under the SUV) the peak pressures were lower: 140 kPa at 1.2 m and 12 kPa at 15 m. Nevertheless, this level is sufficient to knock people down (from 10 to 20 kPa) [23]. It is also noted that, the energy stored in a tank is proportional to PV (where P – pressure; V-volume). The larger tanks and at higher pressures have more hazardous potential through the blast wave in case of the tank rupture [21].

The size of the *fireballs* produced were 7.7 m in diameter at 45 ms after the tank rupture of Type IV, and 24 m in diameter for Type III tank. The fireballs were lifted in 1 s. The fireball duration was about 4.5 s in both cases (recorded by IR video), and twice less if recorded by high-speed visible range cameras. The heat flux peak values measured in case of Type III tank test at a distance of 15.2 m were equal 210-300 kW/m$^2$ (Please note that about 35 kW/m$^2$ heat flux leads to 1% fatality in 10 seconds) [21].

In case of Type IV tank (stand-alone test) the largest tank projectile fragment was the 14 kg top half of the tank found 82 m away from the original tank location. As for Type III tank test (SUV test) a large tank fragment was found 41 m away from the SUV. The fragment projectiles from the SUV were found at distances up to 107 m. It is possible that undiscovered fragments may have travelled even further [21]. Also, a car could be considered as a “missile” itself (up to 22 m displacement) according to the experiments reported by Weyandt [22]. Under no circumstances should the firefighters attempt to remove a burning hydrogen tank from a vehicle. A new methodology was developed at Ulster that allows the determination of the hazard distances for two general cases: harm to humans and damage to buildings if high pressure hydrogen tank catastrophically fails [23, 24]. This new approach will be discussed in the lecture dedicated to hydrogen deflagrations, detonations and blast waves.

## 7.1 Fire resistance rating of hydrogen tanks

There is an urgent need to demonstrate an increased *fire resistance* of Type III and IV tanks used by car manufacturers or such tanks that do not explode in a fire, even with failed TPRDs. For example, current level of fire resistance for Type IV hydrogen storage tanks remains low: it ranges from 3.5 to 6.5 minutes. Even if a TPRD installed, due to the relatively large orifice diameter (4-6 mm) of a TPRD the length of a flame produced is too high (from 10 to 15 m) and a hazard distance for the members of the public could be around 50 m [25]. This makes a self-evacuation or any rescue operations at an accident scene extremely difficult or sometime impossible.

The work carried out by Ruban et al. was focused on the effects of fire on composite Type IV hydrogen storage vessels, usually fitted on FC vehicles [26]. The aim of this study was to investigate the behaviour of an unprotected composite cylinder in a response to a fire attack in order to design an appropriate protection for it and to reduce the length of any potential hydrogen flame [26]. A series of tests were performed on a 36 L cylinder at a pressure of 70 MPa. The time period from the fire exposure to the bursting of this cylinder (i.e. the burst delay) was measured. The effects of the fire type (localised or global) and the pressure in the tank during the exposure were studied. It was concluded that without any thermal protection, in the case of the studied cylinder, the orifice diameter could be decreased by a factor 10 compared to current practices, allowing the flame length and consequently the safety distance to be decreased by the same factor of 10 [26]. The work evaluated the relationship between the designs of the TPRD i.e. reduced diameter versus the thermal resistance of the tank.

Gambone and Wong [27], and then Webster [28] studied several thermal protection techniques for composite tanks. The tested solutions included a spray of ceramic insulation materials on its outer surface, a wrapping with a ceramic blanket, a protective encapsulation, various intumescent paints, etc. The work [27, 28] did not aim to analyse total fire resistance of the tanks, though Webster reached fire duration 30 min without thermally protected tank rapture [28]. The thermal insulation may not only impart fire resistance but also provide an additional level of an impact protection. This, in turn, may allow tank designers to reduce the amount of reinforcing composite materials needed, which could reduce the cost and weight of storage systems [27].

## 7.2 Safety strategies for inherently safer high-pressure hydrogen storage

The improvement of *fire resistance rating* of hydrogen storage tanks was the topic of research at Ulster University, in the HySAFER centre. The idea was to improve the fire resistance of composite hydrogen storage tanks by applying a coating of an *intumescent* paint. The intumescence is a versatile method for providing materials with a reaction and resistance to fire. When heated beyond a critical temperature, the intumescent material begins to swell and expand, forming an insulation coating and limiting heat and mass transfer. An intumescent paint/coating is a multi-component system that essentially consists of *a char former* (e.g. pentaerythritol); an acidic component (e.g. ammonium polyphosphate); a *spumific/blowing agent* (e.g. melamine). Experimental work carried out in one of the project lead by Ulster demonstrated that even with one layer of an intumescent paint (in the range 7-20 mm) applied on Type IV tank its fire resistance rating increases from several minutes up to 2 hours. The further and more advanced research has been made to develop safety technology excluding tank rupture in a fire, which will be described in this lecture.

As it was mentioned previously many applications using hydrogen as an energy carrier require its storage, in gaseous form, at pressures up to 100 MPa. Due to such high pressures the required hazard distances can be quite large. Therefore, to reduce the costs of the required systems and

infrastructure, there is a need to develop innovative engineering systems that can allow these distances to be safely reduced, when considering both unignited hydrogen releases and jet fires. For example, a correctly designed and installed PRD should produce a jet fire with the shortest possible flame length or, in case of unignited release, a flammable cloud with the smallest dimensions. In order to achieve this, a plane nozzle flow is considered to be a realistic scenario to investigate leaks from high-pressure equipment cracks, fittings, connections, etc. The results of the CFD study carried out at Ulster University (HySAFER) indicated that the reduction of hazard distances is possible using *plane nozzle* TPRDs [29]. There is a lack of experimental data when considering hydrogen jets emanating from plane nozzles. The model introduced by Makarov and Molkov [29] aimed to numerically predict the behaviour and structure of highly under-expanded hydrogen jets emanating from round nozzles and plane nozzles with different aspect ratios (ARs) [29]. This allowed understanding of hydrogen concentration decay and predicting at what point the hydrogen concentration in air drops below the LFL of 4 vol. %. During this study the simulations were carried out on non-reacting under-expanded hydrogen jets emanating from a high-pressure hydrogen storage at pressure 400 bar from three different nozzles – round nozzle with internal diameter 1 mm, plane nozzle with AR = 5.0, and plane nozzle with AR = 12.8 with all nozzles having the same cross-sectional area. This work investigated the subsequent differences in the structure of the jets produced. The results from the simulations undertaken revealed that the longest flammable envelope was produced by the round nozzle jet, reaching around 4.1 m downstream. In contrast, the plane nozzle jets produced much shorter flammable envelopes: the plane nozzle with AR = 5.0 reached 2.8 m downstream and the plane nozzle with AR = 12.8 reached 2.3 m downstream. For AR = 12.8 flammable envelope shortened 1.8 times compared to circular nozzle where AR=1 (Figure 12). Hydrogen jet fires were studied by Mogi and Horiguchi using the described above experimental setup [30]; the shortest jet fire – 1 m - was again produced by the plane nozzle with AR=12.8, while the round nozzle resulted in jet fire about 2.0 m length.

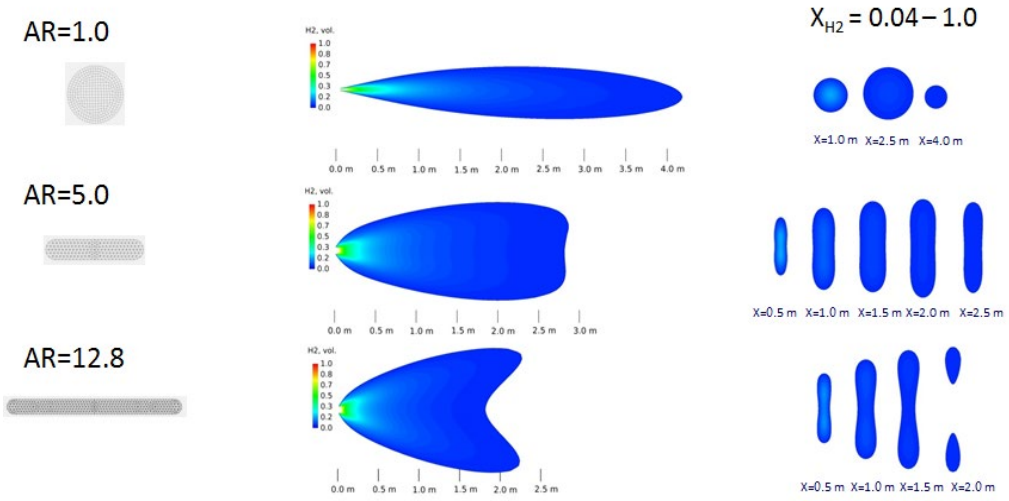


Figure 12. Distribution of hydrogen volume fraction (0.04 – 1.0 range) along the minor axis for round and plane nozzles [29].

## 7.3 Potential hazards and safety issues associated with $cGH_2$: summary

The potential hazards associated with the on-board storage of compressed gaseous hydrogen include:

- Difficulty in identification of hydrogen release as the gas is odourless, colourless and tasteless. The odorants cannot be added to hydrogen.
- Hydrogen can cause *embrittlement* of metals. This may result in the decrease of material strength and consequently in container's fracture, leading to a hydrogen leak.
- Accumulation of hydrogen, over a long period of time, in enclosures such as a garage or mechanical workshop, vehicle passenger compartments. *Asphyxiation* might occur due to displacement of air with hydrogen.
- Formation of hydrogen-oxygen or hydrogen-air flammable mixtures. The intake of flammable mixture into a building ventilation system may lead to a deflagration or even to a detonation.
- High pressure hydrogen jets may cut bare skin [31].
- An overpressure and impulse can lead to: people's eardrum damage, tank rupture, flying debris, shattered glass, etc.
- *Pressure peaking phenomenon* may lead to a garage collapse in just one second (will be discussed in the following lectures).
- Hydrogen can be ignited easily as its MIE is 0.017 mJ (which is 10 times lower compared to other fuels). A static spark can ignite hydrogen released.
- When pure hydrogen is burning its flames are invisible in the daylight.
- Hydrogen burns rapidly and does not produce smoke.
- An external fire, heat or thermal radiation can cause a mechanical rupture of a tank due to the thermal decomposition of the polymeric and composite materials. The current value of fire resistance (publicly available) is up to 12 minutes before the catastrophic failure may occur.
- In case of a TPRD malfunction, a worst-case scenario is possible: a rupture (i.e. a catastrophic failure) of hydrogen storage tank, producing fireball, blast waves and burning projectiles.

# 8. Leak-no-burst safety technology

Composite vessels for onboard storage of high-pressure hydrogen have been produced and brought to the service for road, rail, marine and aviation applications in many countries around the globe. The weakest point of composite vessels is their reaction to fire. For example, in a localised fire, TPRD may not be initiated as, for instance, demonstrated, by accidents with

compressed natural gas vehicles in the USA. Besides, TPRD could be blocked from a fire in an accident, etc. These potential hydrogen safety engineering flaws can turn highly critical for life and property protection due to devastating consequences of tank rupture, i.e. blast wave, fireball and projectiles. The quantitative risk assessment of the use of hydrogen-powered vehicles (HPV) on London roads conducted at HySAFER Centre of Ulster University demonstrated that the risk of using hydrogen cars is acceptable if the time to hydrogen storage tank rupture in a fire, i.e. fire-resistance rating (FRR), is around 50 min [34]. This required FRR is not comparable to the currently observed in experiments FRR = 4-6 min.

The leak-no-burst (LNB) safety technology for explosion free in a fire tank resolves this outstanding safety issue and does not require TPRD, making the tank TPRD-less [35]. The technology provides a level of risk of HPV below that of the fossil fuel vehicles. The TPRD-less tank structure comprises all elements of an ordinary storage tank, but the thermal protection layer (TPL), which substitutes a part of the tank composite overwrap and can be either load bearing or not. Even TPRD could be integrated if required but that would be of much smaller nozzle diameter(s). The concept works in such a way that a certain combination of the predetermined properties and thicknesses of the primary/original composite layer and TPL provides tank integrity in a fire while the heat transfer causes hydrogen-tight liner melting and thus hydrogen release in a form of microleaks through the composite wall. The microleaks of hydrogen either burn in tiny invisible flames or decay below the lower flammability limit. The prototypes were designed at Ulster, manufactured and fire tested in the USA in conditions of permanent fire and fire extinction. All tested TPRD-less tank prototypes started to leak within 10 min, i.e. time of regulated duration of the localised portion of the fire test, and hydrogen had been safely released from the tank down to atmospheric pressure.

Figure 13 shows the performance of "original" tank behaviour in a fire (left) and behaviour of the LNB (TPRD-less, explosion free in a fire) tank (right).

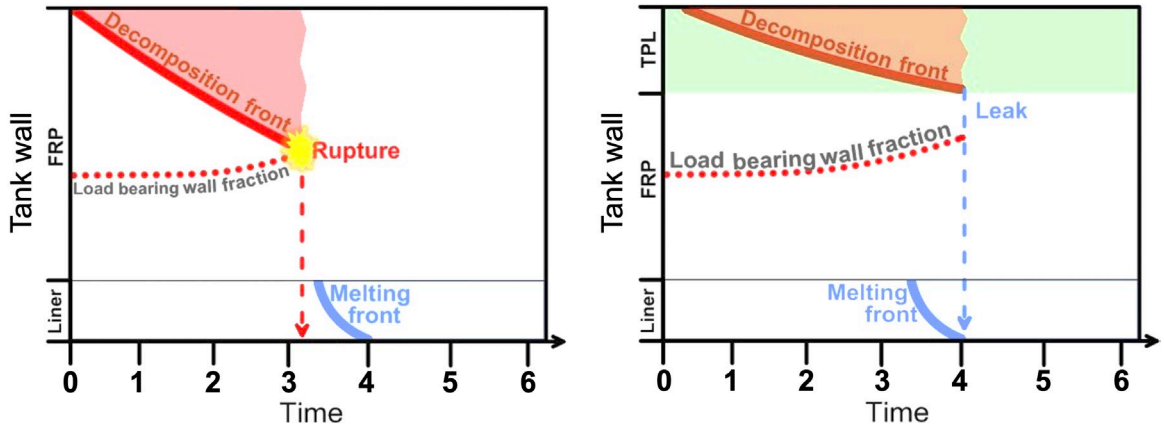


Figure 13. Schematic dynamics of composite tank performance in a fire: original tank (left) and TPRD-less tank (right).

The tank has a liner limiting hydrogen permeation to the regulated level, and the load-bearing fibre reinforced polymer (FRP). In a fire conditions, the resin that bonds the fibres in a

composite thermally degrades and this degradation advances further from tank outer layers inside (shown in Figure 13 as “Decomposition front”). The fibres get loose and thus unable to bear the hydrogen pressure load anymore behind the decomposition front. The hydrogen pressure inside the tank grows with time due to the heat transfer from the fire through the wall. This process increases the fraction of the wall thickness that is sufficient to hold the pressure load marked as “Load bearing thickness”. At the time when the decomposition front comes in contact with the load-bearing wall fraction (intersection of lines “Decomposition front” and “Load bearing thickness” in Figure 13, left), the rupture happens. The difference of the “TPRD-less” tank design compare to the original tank is in the use of at least of two composites with different thermal properties. External composite, named in Figure 13 as “TPL”, has lower thermal conductivity, while the internal part of wall composite, named as “FRP” has higher thermal conductivity. The thermal parameters of liner, TPL and FRP and their thickness are selected to achieve melting of the liner before the resin decomposition front reaches the current load-bearing fraction of the wall thickness. Once the liner is melted, hydrogen starts to leak through tank wall safely as insignificant leak and the internal pressure reduces before the composite wall loses its load-bearing ability.

In addition to the elimination of tank rupture in a fire, associated with unacceptable by the public blast wave, fireball and projectiles, the technology excludes long jet fires from TPRD and the pressure peaking phenomenon in garage-like enclosures, which is characteristic only for hydrogen due to its smallest molecular weight. The technology is based on Ulster’s IP “Composite vessel for hydrogen storage” (European Patent Application No 18706224.5, 5 September 2019). This is not a safety technology to simply increase the fire-resistance rating of a composite tank, but a breakthrough innovative engineering strategy enabling an unprecedented level of safety of hydrogen storage.

This validated safety technology has a strong commercial potential for hydrogen storage onboard in automobile, rail, marine, aerospace applications, as well as for stationary storage in case of residential and industrial applications of fuel cells for heat and power, etc. The technology addresses the concerns of firefighters and rescue services, especially in confined spaces like tunnels where the blast wave practically does not decay, and fireball propagates with unacceptable high velocity.

# 9. Novel storage techniques

This chapter discusses new hydrogen storage technologies. This first version focuses on new tank technologies for storing gaseous hydrogen gas compressed between 350 and 700 bar for passenger FCEVs.

New storage technologies are necessary because the current type III (for 350 bar) and IV (for 350, 500 and 700 bar) tank technology are still expensive, too heavy, too bulky and not sufficiently conformable.

## 9.1 Storage cost

Even if the price is still high compared to the storage system of current thermal vehicles, technical and economic studies carried out by the CEA in the project FCH-JU-Copernic (2016) and by Polaris-Partner in the FCH-JU Tahya (2020) project show that the target of 600€ and 400€ per kilogram of hydrogen stored is reached in 2016 and 2020.

Table 9. Compressed Storage System Performance Targets

| Tank storage system Indicators | Unit | State of the art | | FCH-JU Target | | | FCH-JU Copernic project 2014-2016 (5 000 units/year) | FCH-JU Tahya project 2018-2020 (20000 units/year) |
|---|---|---|---|---|---|---|---|---|
| | | 2012 | 2017 | 2020 | 2024 | 2030 | 2016 | 2020 |
| Cost - Capex (at tank storage system) | (€ tss)/kg $H_2$ | 3000 | 1500 | 500 | 400 | 300 | 600 | 400 |
| Volumetric capacity (at tank storage system) | (kg $H_2$)/(L tss) | 0,02 | 0,024 | 0,03 | 0,033 | 0,035 | 0,022 | - |
| Gravimetric capacity (at tank storage system) | (kg $H_2$)/(kg tss) | 4 | 5 | 5,3 | 5,7 | 6 | 5 | - |
| EC79 Test achieved | | | | | | | yes* | - |
| R134 achieved | | | | | | | not tested | - |

* $H_2$ cycling test not scheduled in the project

## 9.2 Storage volume, footprint volume and modularity

In practice, it is necessary to separate the Volume used to store gas (VS) from the footprint (VE) of the storage system. The latter includes the volume of the tank and also lost volumes related to the existence of supports or stacking of these tanks. Note for example the association of bottle shapes with a parallelepipedal VE while physically the VS is quasi-cylindrical. If an important objective is the integration of a storage system in a motor vehicle, the bottle shape therefore brings limitations that are hardly compatible with current architectures. In fact, at the integration level, two objectives remain: compactness (VS / VE which should tend towards unity) and size (VE which should be as small as possible). The term conformability combines the two previous aspects. To this notion, we can also add that of modularity which ultimately allows great latitude for the external shape of the storage system as well as for the total mass of onboard hydrogen, and this by playing on the assembly and the number of modules. On the other hand, the aspect of conformability or even modularity is also strongly linked with reductions in the cost of storage systems and their size. Towards conformability and in addition to compactness and size, modularity could also be a way to reduce the lost volume during the tank integration if efficient multiple tank solutions could be defined. The table below displays different examples of conformable tanks. Most of those tanks are only concept ones, because their cost is likely to be prohibitive for public use (mainly linked to manufacturing cost).

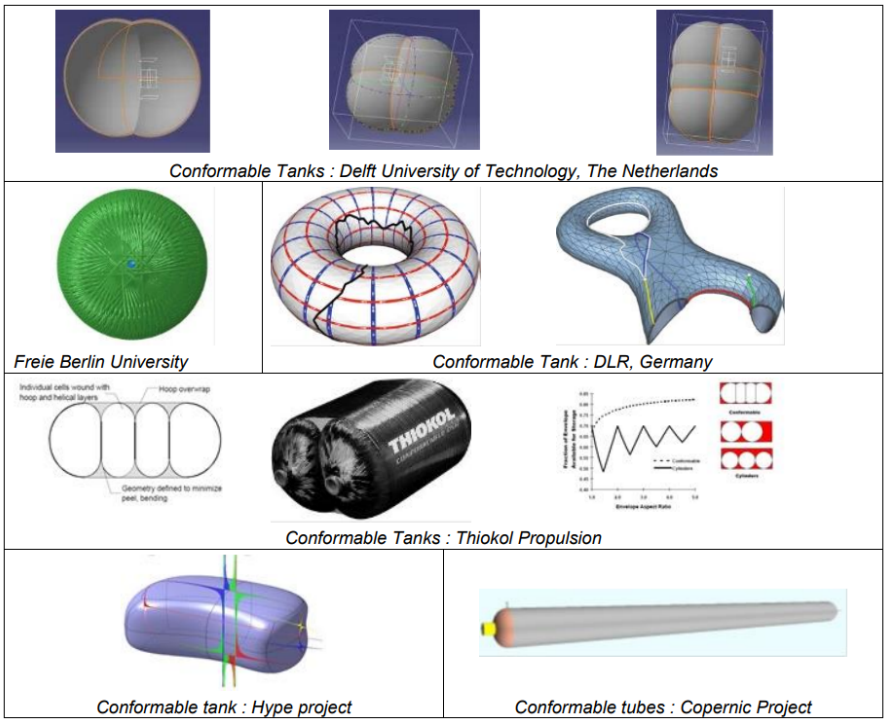


Figure 14. Examples of new $H_2$ tank geometries

## 9.3 New 2020 trend

Over the last 10 years, large Composite Overwrapped Pressure Tanks were practicable solution regarding the integration of the hydrogen storage system in the current vehicle architecture developed primarily for combustion engines. With the rapid expansion of BEV worldwide car manufacturers have the need to share the same vehicle architecture and look for new design of storage systems with conformable tanks. The integration of both energy systems in the same car body would enable economies of scale, simplify and reduce engineering and manufacturing processes and allow flexible production, which could buffer demand fluctuations without compromising customer expectations of space, performance, safety, or cost. As a result, the justification for the new geometries desired by car manufacturers comes down on the one hand to being able to use the same platform for BEV and FCEV vehicles (Figure 15). This involves "box" shape tanks. On the other hand, increase the range of vehicles by using the space lost.

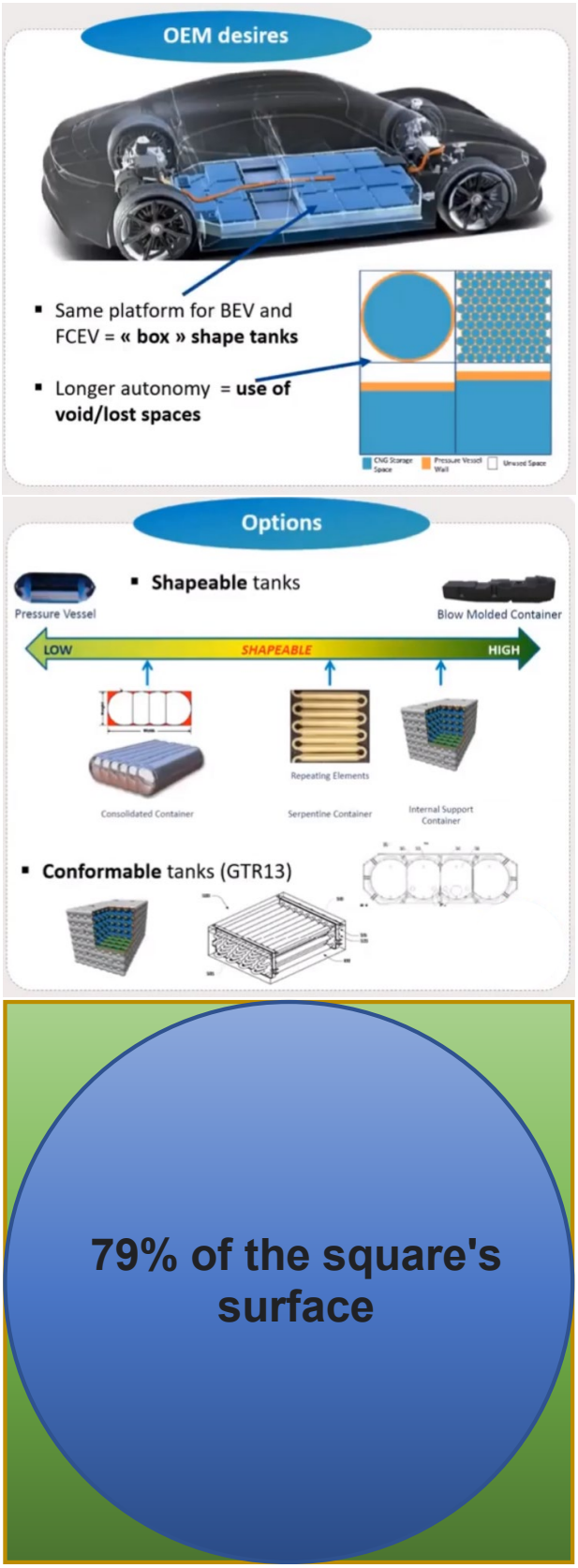


Figure 15 New trend for Compressed Storage System Integration and Geometries

Figure 16 shows an overview of the different pressure tanks that can be used for alternative hydrogen storage systems to be integrated in battery design spaces. The type-I, -II, -III, -IV and

–V pressure tanks can be integrated as standalone pressure tanks (as currently used in common fuel cell vehicles) or they can be arranged similarly to a pencil-box in the underbody of the vehicle in the square design space of the battery of electric vehicles. The tanks can be connected in series or in parallel and are the main components of the underbody hydrogen storage system. These pressure tanks do still have their typical cylindrical shape with dome-parts on each cylinder ends but due to its ability to adapt their overall shape to a free-form design space, they could be classified as "conformable pressure tanks". The so-called "snake tanks" and paddle pressure tanks can be also found in this category of "conformable tanks".

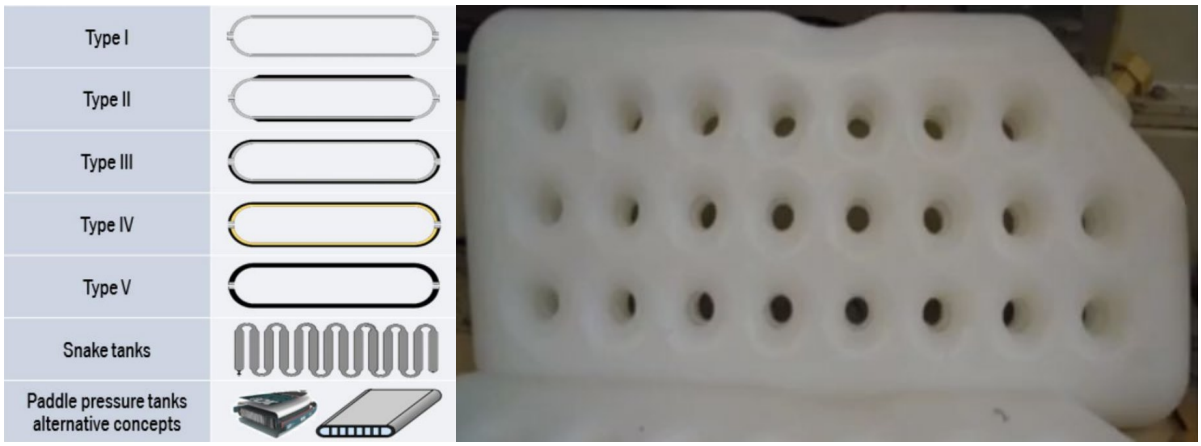


Figure 16 Classical and Alternative Tanks & alternative liner manufactured by RAIGI

# 10. Utilisation of the e-Laboratory

The e-Laboratory for hydrogen safety has been introduced in Lecture 1. A number of tools are particularly useful for storage applications. These include calculation of blow down dynamics from a storage tank, time to tank rupture and fireball correlations.

## 10.1 Blow down of storage tank dynamics

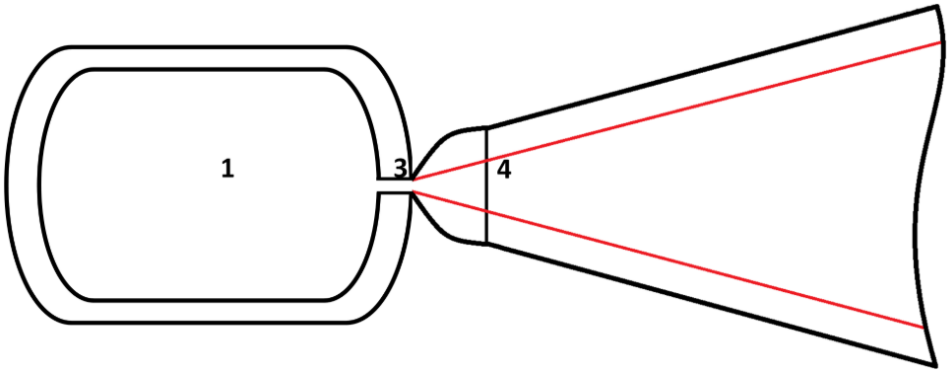


Figure 17. Schematic of expanded (red lines) and under-expanded (black lines) jet.

1 – Reservoir (high-pressure vessel), 3 - Nozzle or orifice exit (notional entrance), 4 – notional nozzle/orifice exit (where pressure and velocity is equal to ambient and local speed of sound, respectively).

As assumed in Figure 17, the flow velocity in the storage reservoir (1) is zero. The flow parameters at the actual nozzle exit - as (3). For sonic and super-sonic flows, the parameters at the nozzle exit (3) are those for choked flow and therefore the nozzle exit velocity is equal to the local speed of sound (Mach number $M$ = 1). The notional nozzle is between the actual nozzle exit (3) and the notional nozzle exit (4). At the notional nozzle exit (4) jet parameters correspond to a fully expanded jet with the pressure equal to the ambient one and uniform flow velocity equal to a local speed of sound. Note that the friction losses between nozzle entrance and exit, through the length of the flow pathway, is neglected in the following model. Otherwise, the friction losses must be taken into account.

### 10.1.1 Adiabatic model

The adiabatic blowdown model is based on the assumption of a quick release from a high-pressure reservoir and negligible heat transfer effects to the released hydrogen temperature. It is built on the model for expanded and under-expanded jet parameters of Molkov [25], which describes parameters in an expanded and under-expanded jet through the characteristic stages of its development – in reservoir (1), nozzle or orifice (3), and effective nozzle diameter (4).

### 10.1.2 Isothermal model

The isothermal blowdown of a storage tank is based on the assumption of a relatively long release from a high-pressure reservoir, so that heat transfer significantly changes the temperature of the outflowing hydrogen.

The phenomena was observed experimentally and described in Schefer et al. [37], where hydrogen temperature inside the reservoir initially dropped down to approximately T = - 45 °C, and then recovered to T ≈ -35 °C during an 8 minute release from 414 bar storage, with total pipeline length of 11 m.

The procedure is built on the model for expanded and under-expanded jet parameters (Molkov [25]), which describes parameters in an expanded and under-expanded jet through the characteristic stages of its development – in reservoir (1), nozzle or orifice (3), and effective nozzle diameter (4).

In both the adiabatic and isothermal models, the under-expanded jet parameters model is derived from the Abel-Noble equation of state for hydrogen and conservation equations for mass and energy. The outflowing mass flow rate, determined according to the under-expanded jet parameters model, is integrated until the ratio of the pressure in the vessel, $p1$, to the ambient pressure, $p4$, reaches the critical value corresponding to the chocked flow conditions in the orifice:

$$\frac{p_1}{p_4} = \left(\frac{\gamma+1}{2}\right)^{\frac{\gamma}{\gamma-1}} \quad (1)$$

With the help of this tool in e-Laboratory, the graph for the pressure $p1$ (Y-axis) against time $t$ (X-axis) could be plotted when the calculation is finished.

When utilising the tool of Adiabatic and isothermal model of blow down of storage tank dynamics of e-laboratory (https://elab-prod.iket.kit.edu/), users need to firstly choose 'Adiabatic blowdown of storage tank' or 'Isothermal blowdown of storage tank'. The input parameters of the two cases are shown in Figure 18. Note that for the isothermal blowdown case, the low limit hydrogen temperature in reservoir is needed in addition to other parameters, e.g reservoir pressure, temperature, tank volume, orifice diameter, ambient pressure, integration time and number of time steps for integrations.

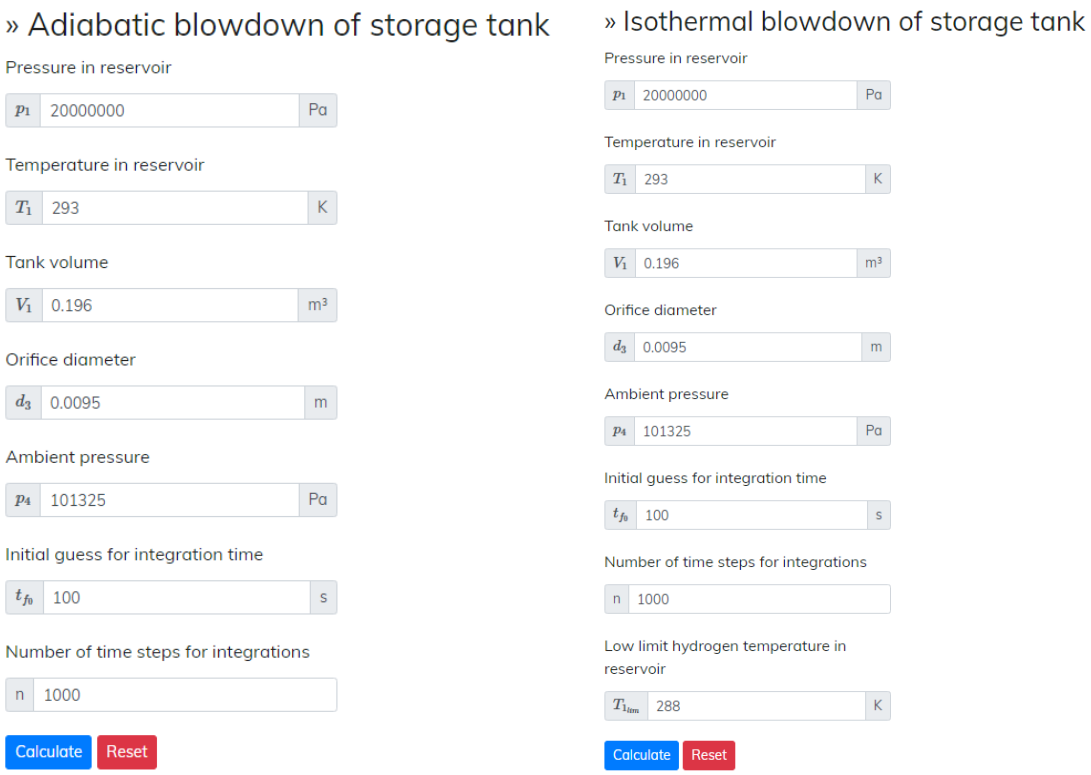


Figure 18 Input parameters of adiabatic and isothermal blowdown of storage tank

Once the input parameters are given, clicking the calculate buttom will generate a table of output parametres, e.g. pressure, temperature, mass, density in reservoir, pressure, density, pressure in orifice, density, temperautre and velocity in effective nozzle, effective nozzle diametre, mass flow rate and required time of blowdown. The profile of pressure in reservoir as a funciton of time could be plotted by clicking the 'Plot' button, as shown in Figure 19. Data could also be exported to CSV.

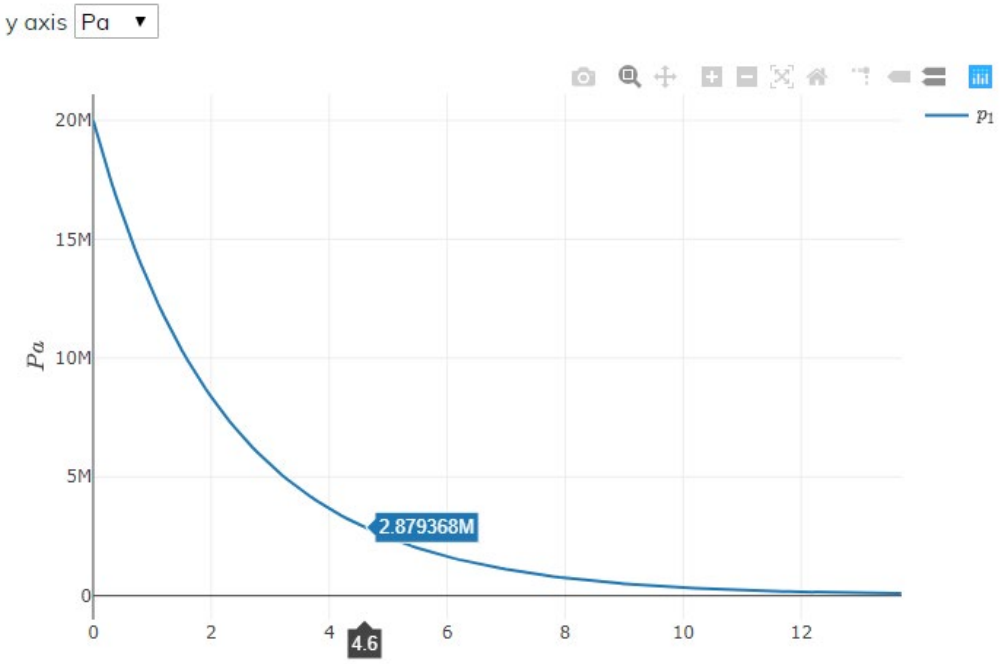


Figure 19 Profile of pressure in reservoir as a function of time

## 10.2 Fireball scale correlations

This model allows to calculate fireball size for the stand-alone and under-vehicle (onboard) tank location.

The methodology is based on the work by Dadashzadeh et. al [38]. Calculation of a fireball size after a stand-alone tank rupture is a part of the methodology for the calculation of the blast wave decay after compressed gas vessel rupture [24] and hazard distances attributed to the blast parameters. According to the technique, the fireball size is calculated as a hemisphere occupied by combustion products resulting from complete combustion of released hydrogen in air (non-premixed turbulent combustion at contact surface occurs at stoichiometric concentration of reactants). The estimated fireball size for stand-alone tank is then scaled for onboard tank ("under-vehicle" tank in terminology [24]) based on the experimental data [39, 40].

Briefly, the diameter of the fireball in standalone ($D_{SA}$) and onboard ($D_{OB}$) conditions could be calculated by the following two equations:

$$D_{SA} = 2 \times \left(\frac{3V_{burned}}{2\pi}\right)^{1/3} \quad (2)$$

$$D_{OB} = 5.2 \times \left(\frac{3V_{burned}}{2\pi}\right)^{1/3} \quad (3)$$

where $V_{burned}$ is the volume of combustion products, which is expressed as:

$$V_{burned}=(V_{air}+V_{H2})*6.85 \quad (4)$$

where $V_{air}$ and $V_{H2}$ are the volumes of air to burn hydrogen and hydrogen in reservoir, respectively.

## References


1. DoE. Hydrogen storage (2015). Available from: http://energy.gov/eere/fuelcells/hydrogen-storage [accessed on 06.11.20].
2. NASA. Summary: space applications of hydrogen and fuel cells. Available from: http://www.nasa.gov/topics/technology/hydrogen/hydrogen_2009.html [accessed on 06.11.20].
3. Introduction to Hydrogen for Code Officials, U.S. Department of Energy, Washington DC. Available from: http://www.hydrogen.energy.gov/training/code_official_training/ [accessed on 06.11.20].
4. US DoE, US Department of Energy (2008). Hydrogen safety training for first responders. Available from: http://hydrogen.pnl.gov/FirstResponders/ [accessed on 06.11.20].
5. Risø Energy Report 3: Hydrogen and its competitors (2004). Edited by Larsen, H, Feidenhans, R and Petersen, LS. Risø National Laboratory. ISBN 87-550-3349-0.
6. Zuettel, A (2013). Hydrogen: production, storage, applications and safety. H2FC European Technical School on Hydrogen and Fuel Cells. 23-27 September 2013, Crete, Greece.
7. DoE targets for on-board hydrogen storage systems for light-duty vehicles (2009). Published on DOE/EERE website. Available from: http://energy.gov/sites/prod/files/2014/03/f12/targets_onboard_hydro_storage.pdf [accessed on 06.11.20].
8. GTR, Proposal for a Global Technical Regulation (GTR) on hydrogen fuelled vehicles, 2013. ECE/TRANS/WP.29/GRSP/2013/41. United Nations. Economic Commission for Europe. Inland Transport Committee. World Forum for Harmonization of Vehicle Regulations, 160th Session, Geneva, 25-28 June 2013.
9. Mafeld, A. (2015). CPVs: Regional trends in the global market. JEC Asia: Composite Pressure Vessels Forum. Singapore, October 22, 2015.
10. Barthelemy, H (2009). Hydrogen storage technologies: compatibility of materials with hydrogen. Teaching materials of the 4th ISCARW, Corsica, June, 2009.
11. Klebanoff, L (Ed) (2012). Hydrogen storage technology: Materials and applications. Boca Raton: CRC Press. Taylor&Francis.
12. Warner, MJ (2005) Low cost, high efficiency, high pressure hydrogen storage tanks, Quantum Technologies, Irvine, CA. Available from: https://www1.eere.energy.gov/hydrogenandfuelcells/pdfs/04_warner_quantum.pdf [accessed on 06.11.20].
13. EU No 406/2010, Commission Regulation of 26 April 2010 implementing Regulation (EC) No 79/2009 of the European Parliament and of the Council on type-approval of

hydrogen-powered motor vehicles. Official Journal of the European Union. Vol. 53, 18 May 2010. Available from: http://eur-lex.europa.eu/LexUriServ/LexUriServ.do?uri=OJ:L:2010:122:FULL:EN:PDF [accessed on 06.11.20].

14. Sunderland, P (2010a). Hydrogen vehicles and safety regulations in the U.S. Teaching materials of the 8th ISCARW, Belfast, UK, June 2010.
15. Malek, MA (2006). Pressure relief devices ASME and API code simplified. New York: McGraw Hill.
16. Motor Vehicle Fire Investigation, computer-based training accessed. Available from: http://depts.washington.edu/vehfire/topics.html [accessed on 06.11.20].
17. GTR, Proposal for a Global Technical Regulation (GTR) on hydrogen fuelled vehicles, 2013. ECE/TRANS/WP.29/GRSP/2013/41. United Nations. Economic Commission for Europe. Inland Transport Committee. World Forum for Harmonization of Vehicle Regulations, 160th Session, Geneva, 25-28 June 2013.
18. Royle, M and Willoughby, D (2012). Releases of unignited liquid hydrogen. HSL Report XS/11/70. Available from HSL: Buxton.
19. Hall J, Willoughby DB, Hooker P, 2013. Ignited Releases of Liquid Hydrogen, Buxton: Health and Safety Laboratory
20. Mays, T. (2014). Scientific progress and technological bottlenecks in hydrogen storageH2FC European Technical School on Hydrogen and Fuel Cells. 23-27 June 2014, Crete, Greece.
21. Zalosh, R (2007). Blast waves and fireballs generated by hydrogen fuel tank rupture during fire exposure. Proceedings on the 5th Seminar on Fire and Explosion Hazard, Edinburgh, UK, 23-27 April 2007, pp. 2154-2161.
22. Weyandt, N (2006). Vehicle bonfire to induce catastrophic failure of a 5000-psig hydrogen cylinder installed on a typical SUV, Motor Vehicle Fire Research Institute. Report. December, 2006. Available from: www.mvfri.org [accessed 06.11.20].
23. Barry, TF (2003). Fire exposure profile modelling: some threshold damage limit (TDL) data. A whitepaper by TFBarry Publications, September 2003.
24. Molkov, V and Kashkarov, S (2015). Blast wave from a high-pressure gas tank rupture in a fire: stand-alone and under-vehicle hydrogen tanks. vol. 40, no. 36, pp. 12581–12603, 2015.
25. Molkov, V (2012). Fundamentals of hydrogen safety engineering, Part I and Part II. Available from: www.bookboon.com, free download e-book.

26. Ruban, S, Heudier, L, Jamois, D, Proust, C, Bustamante-Valencia, L, Jallais, S, Kremer-Knobloch, K et al (2012). Fire risk on high-pressure full composite cylinders for automotive applications. International Journal of Hydrogen Energy, Vol. 37, pp. 17630-17638.

27. Gambone, LR and Wong, JY (2007). Fire protection strategy for compressed hydrogen-powered vehicles. 2nd International Conference on Hydrogen Safety, San Sebastian, Spain, 11-13 September, 2007.

28. Webster, C (2010). Localized Fire Protection Assessment for Vehicle Compressed Hydrogen Containers. Report DOT HS 811 303.

29. Makarov, D, and Molkov, V. (2013). Plane hydrogen jets. International Journal of Hydrogen Energy, Vol. 38, no. 19, pp. 8068–8083.

30. Mogi, T and Horiguchi, S (2009). Experimental study on the hazards of high-pressure hydrogen jet diffusion flames. Journal of Loss Prevention in the Process Industries. Vol. 22, pp. 45-51.

31. Hammer, W (1989). Occupational Safety Management and Engineering, 4th edition, Prentice Hall, Englewood Cliffs, New Jersey, 1989, ISBN 0-13-629379-4, chapter 19.

32. UN WP.29/GRSP/GTR 13-2: https://wiki.unece.org/download/attachments/87622122/GTR13-7-22%20%20Meeting%20minutes%207th%20IWG%20GTR13%20Phase%202.pdf?api¼v2. [accessed on 17.11.20].

33. Mair, G. W.: Presentation at UN WP.29/GRSP/GTR 13-2-07: https://wiki.unece.org/download/attachments/87622122/ GTR13-715_BAM_Safety-minimum_burst_ratio%202019-11-07rev.pdf?api¼v2. [accessed on 17.11.20].

34. M. Dadashzadeh, S. Kashkarov, D. Makarov, and V. Molkov, 'Risk assessment methodology for onboard hydrogen storage', Int. J. Hydrog. Energy, vol. 43, no. 12, pp. 6462–6475.

35. Molkov V., Makarov D., Kashkarov S. Composite vessel for hydrogen storage, European Patent Application No 18706224.5, 2019.

36. Regulation No. 134. Uniform provisions concerning the approval of motor vehicles and their components with regard to the safety-related performance of hydrogen fuelled vehicles (HFCV).

37. Schefer R. W., Houf W. G., Williams T. C., Bourne B., and Colton J., "Characterization of high-pressure, under-expanded hydrogen-jet flames," International Journal of Hydrogen Energy, vol. 32, no. 12, pp. 2081–2093, 2007.

38. M. Dadashzadeh, S. Kashkarov, D. Makarov, and V. Molkov, “Socio-Economic Analysis and Quantitative Risk Assessment Methodology for Safety Design of Onboard Storage Systems,” in International Conference on Hydrogen Safety, Hamburg, 2017, vol. 184.

39. N. Weyandt, “Analysis of Induced Catastrophic Failure Of A 5000 psig Type IV Hydrogen Cylinder,” Southwest Research Institute report for the Motor Vehicle Fire Research Institute, 01.06939.01.001, 2005.

40. N. Weyandt, “Vehicle bonfire to induce catastrophic failure of a 5,000-psig hydrogen cylinder installed on a typical SUV,” Southwest Research Institute report for the Motor Vehicle Fire Research Institute, 2006.

41. Y. Tamura, M. Takeuchi, K. Maeda, N. Ohtsuka, K. Sato. Validation of the localized fire test method for on-board hydrogen storage system. SAE Int. J. Passeng. Cars - Mech. Syst. 7(3):1027-1035, 2014.